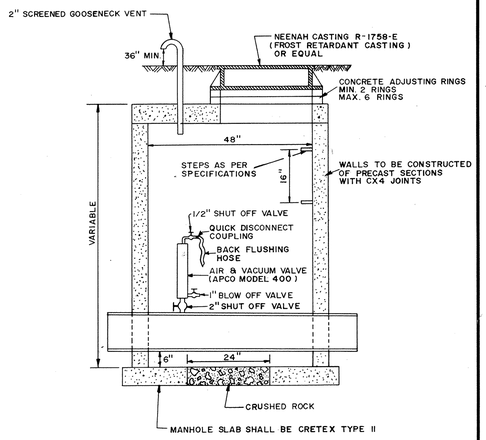


STANDARD AIR RELIEF MANHOLE

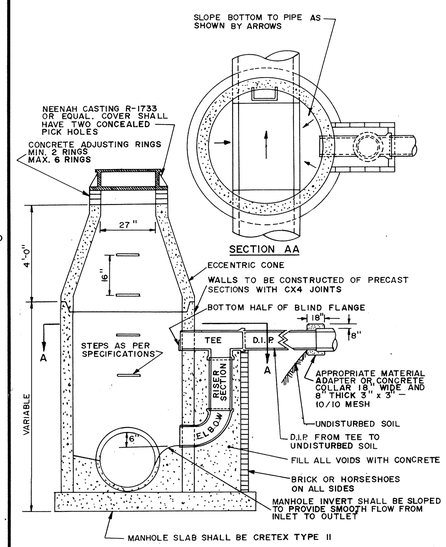


OUTSIDE DROP MANHOLE

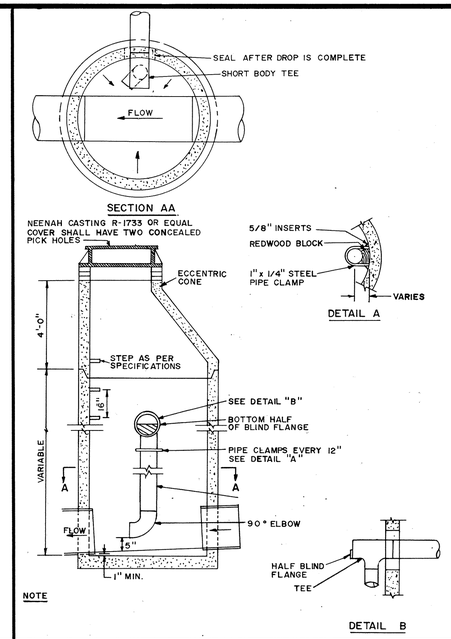


INSIDE DROP MANHOLE

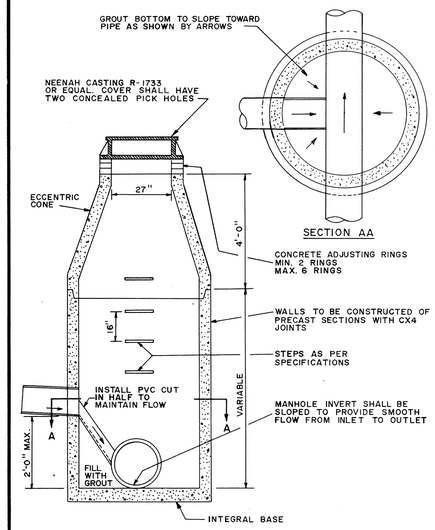


INSIDE DROP MANHOLE (2 FEET OR LESS)

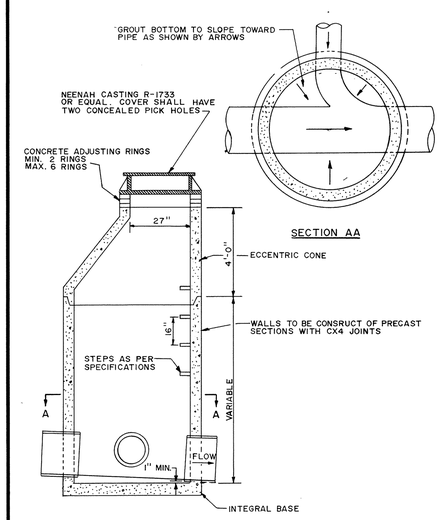


STANDARD MANHOLE

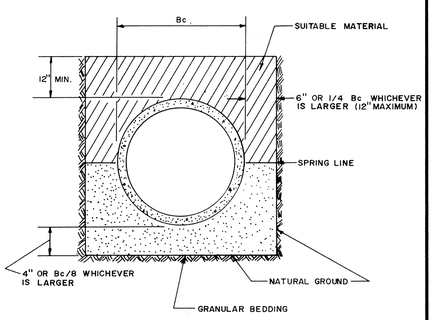


NOTE: ALL COSTS OF EXCAVATION BELOW GRADE AND PLACEMENT OF GRANULAR BEDDING SHALL BE INCLUDED IN THE BID PRICES FOR PIPE ITEMS.

CLASS B PIPE BEDDING

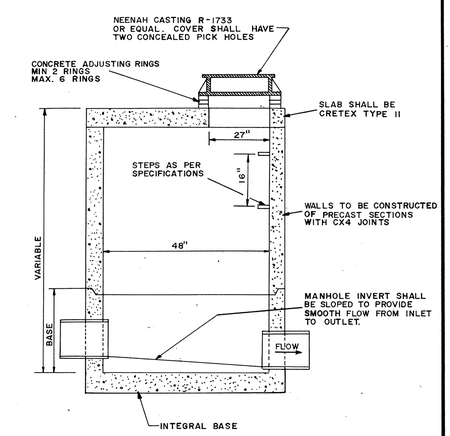


NOTE:
THIS TYPE MANHOLE SHALL BE USED WHEN SPECIFIED OR WHEN THE MANHOLE DEPTH IS LESS THAN 8 FEET.

SLAB TOP MANHOLE

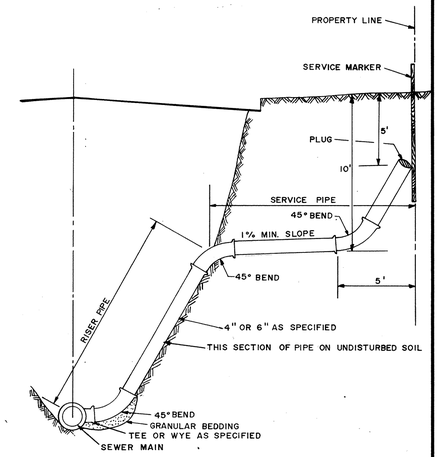


TO BE USED AS SERVICE CONNECTIONS ON DEEP LINES

SERVICE RISER SECTION

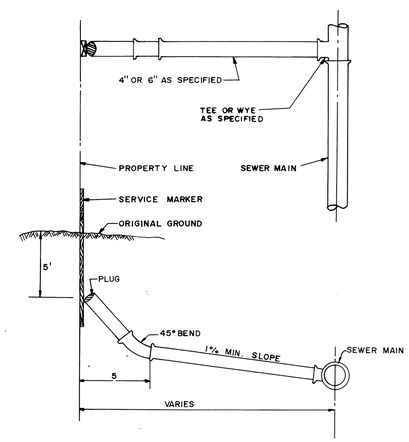


TYPICAL HOUSE SERVICE

RECORD PLAN OCT. 1986

CITY OF ELK RIVER

SANITARY SEWER DETAILS

MSA Maier Stewart & Associates Inc.
CONSULTING ENGINEERS
480 CEDAR STREET (612)227-9475 ST. PAUL, MINNESOTA 55101

| REVISIONS | DATE | DESCRIPTION |
|---|---|---|
| | | |

DESIGNED ____
CHECKED ____
DRAWN MRJ
GRAPHIC SCALE
HORIZ. NONE
VERT.

DATE JAN. 1986 | SHEET 9 OF 10 SHEETS | PROJECT NO. 230-011

DRAWING NUMBER XENIA 86 9

DRAWING NUMBER

DRAWING NUMBER

DRAWING NUMBER

SAFCO PRODUCTS • NEW HOPE, MINNESOTA
REORDER BY PART NUMBER 05053

MINNESOTA BLUEPRINT