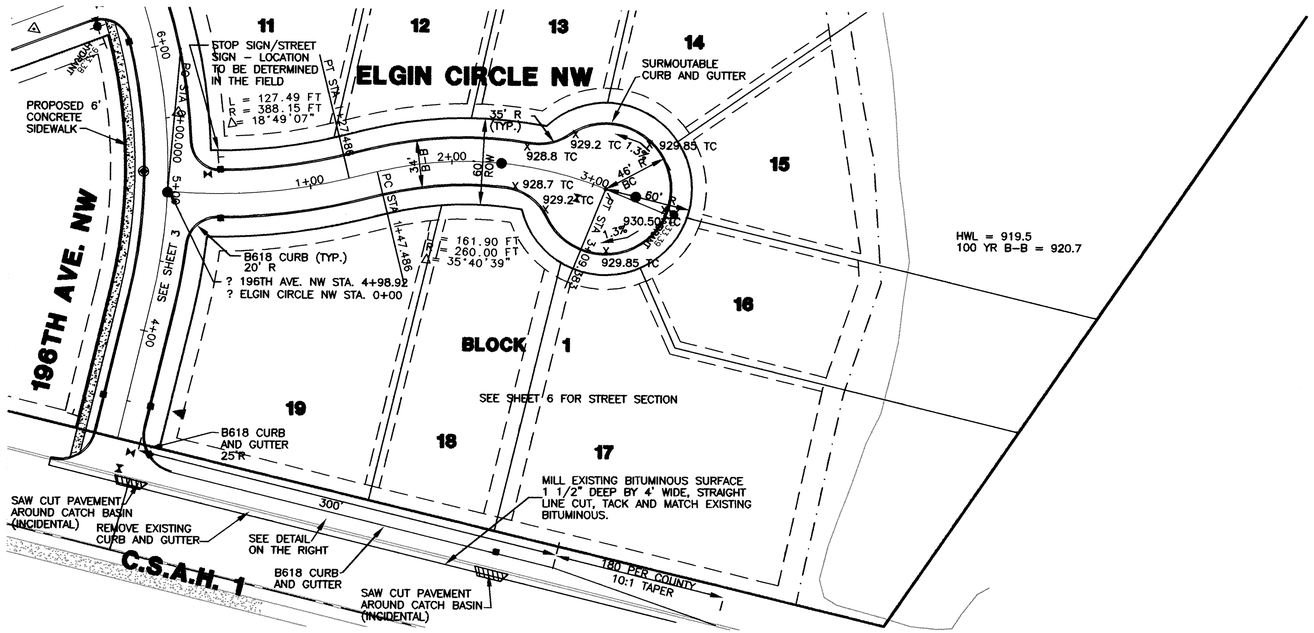

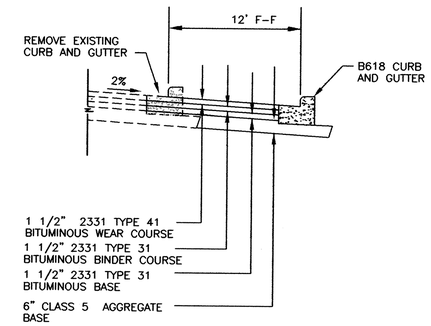

TURN LANE SECTION

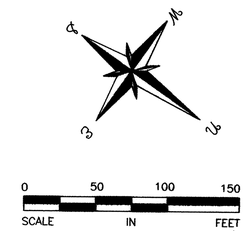

NOTES

1. FIVE FOOT TRANSITION FROM B-6 CURB TO SURMOUNTABLE CURB IS REQUIRED PER ELK RIVER SPECIFICATIONS
2. WEAR COURSE ASPHALT (EXCEPT TURN LANE) TO BE INSTALL IN 2002
3. STREET ADJUSTMENT RINGS TO BE USED FOR WEAR COURSE PAVEMENT MANHOLES

BENCHMARK:
TOP OF IRON PIPE AS SHOWN
ELEVATION=922.75 FT. (NGDV-1929)

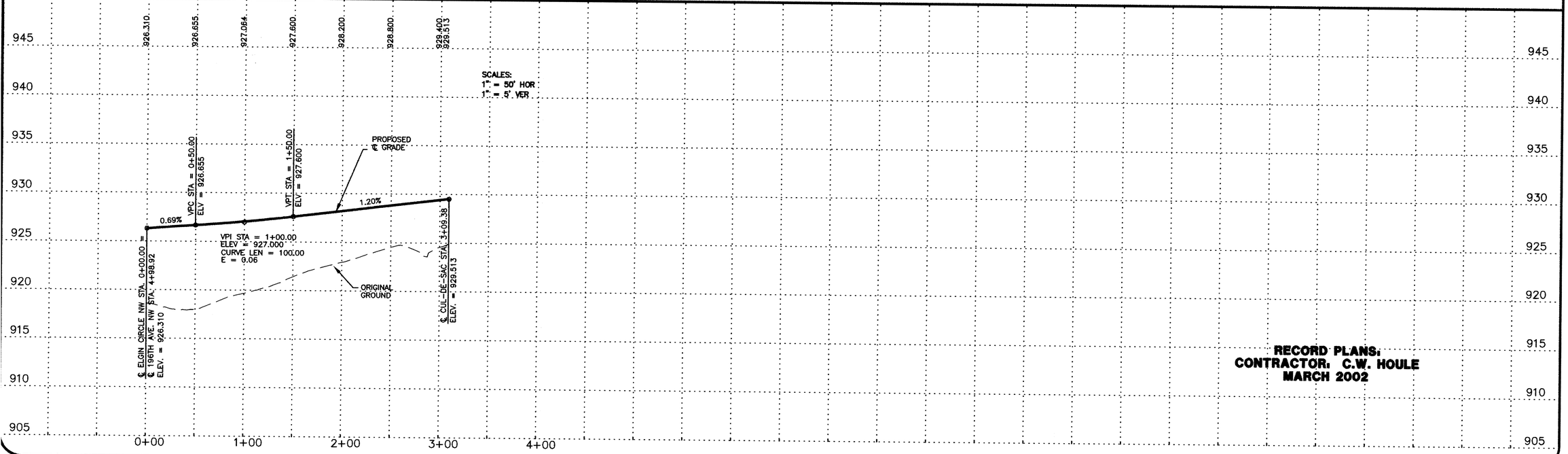

RECORD PLANS:
CONTRACTOR: C.W. HOULE
MARCH 2002

REVISIONS		
DATE	BY	REVISION
3-9-01	DS	CITY COMMENTS
3-2002	SJM	RECORD DRAWING

BOOK 567 PAGE 1 (92/36)

I HEREBY CERTIFY THAT THIS PLAN, SPECIFICATION, OR REPORT WAS PREPARED BY ME OR UNDER MY DIRECT SUPERVISION AND THAT I AM A DULY LICENSED PROFESSIONAL ENGINEER UNDER THE LAWS OF THE STATE OF MINNESOTA.

Kenneth Adolf
Kenneth Adolf
DATE: 01-29-01 REG. NO. 12048

REVIEWED BY: _____ DATE _____

SCHOELL & MADSON, INC.
ENGINEERS * SURVEYORS * PLANNING
SOIL TESTING * ENVIRONMENTAL SERVICES
10580 WAYZATA BOULEVARD, SUITE 1
MINNETONKA, MN 55305
(952) 546-7601 FAX: (952) 546-9065
www.schoellmadson.com

OWNER/DEVELOPER
WINDSOR DEVELOPMENT
9145 EDINBURGH LANE
WOODBURY, MN 55125
DATE: JAN., 2001

PROJECT NAME/SHEET TITLE
WINDSOR OAK HILL
ELK RIVER, MN
ELGIN CIRCLE NW & TURN LANE
STREET CONSTRUCTION

S.M.I. PROJECT NO. 61846-037 SHEET 5 OF 15 SHEETS

DRAWING NUMBER
WINDS 02
5