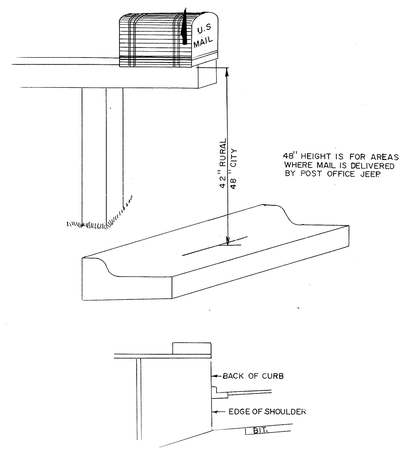

MAIL BOX

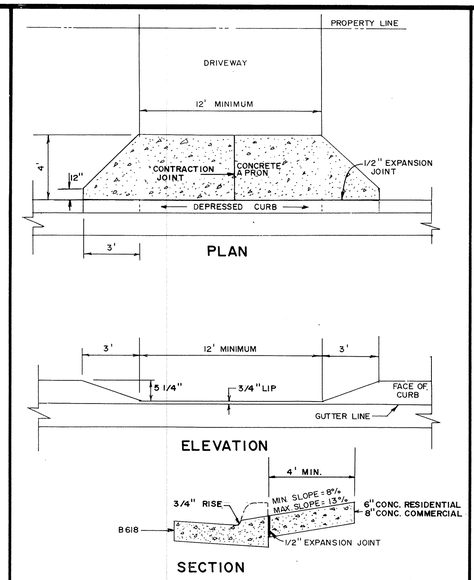

DEPRESSED CURB W/ DRIVEWAY APRON

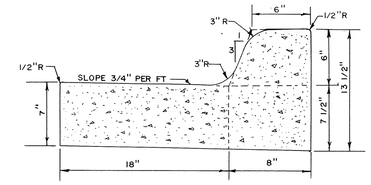

CONCRETE CURB AND GUTTER B618

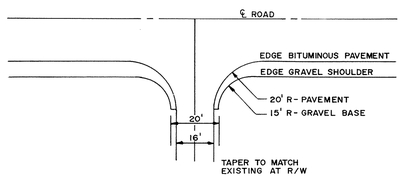

PAVED DRIVEWAY ENTRANCE

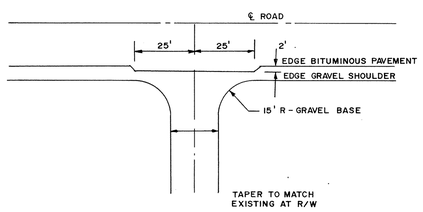

GRAVEL DRIVEWAY ENTRANCE

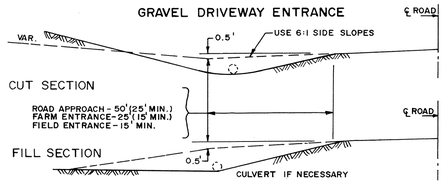

CROSS SECTION

RURAL DRIVEWAY ENTRANCE

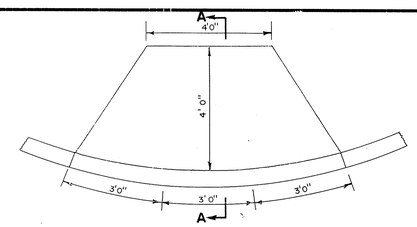

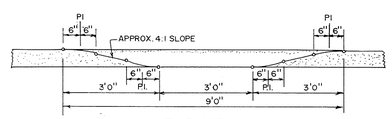

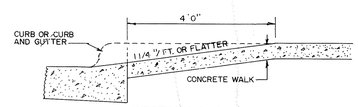

SURFACE TREATMENT- AFTER NORMAL CONC. FINISHING, EMBED AGGREGATE, MEETING THE REQUIREMENTS OF SPEC. 3137 CA70 MODIFIED TO 100% OF THE MATERIAL 1/2" TO 3/8" IN SIZE, IN THE GREEN CONCRETE. THE EMBEDDED AGGREGATE SHALL PROTUDE "A" LEAST 3/16" ABOVE THE CONC. SURFACE. THE EXPOSED AGGREGATE MAY BE LIGHTLY RINSED TO WASH MORTAR OFF OF IT.

PEDESTRIAN CURB RAMPS

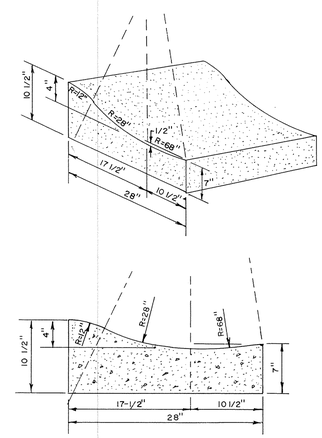

SURMOUNTABLE CONCRETE CURB AND GUTTER

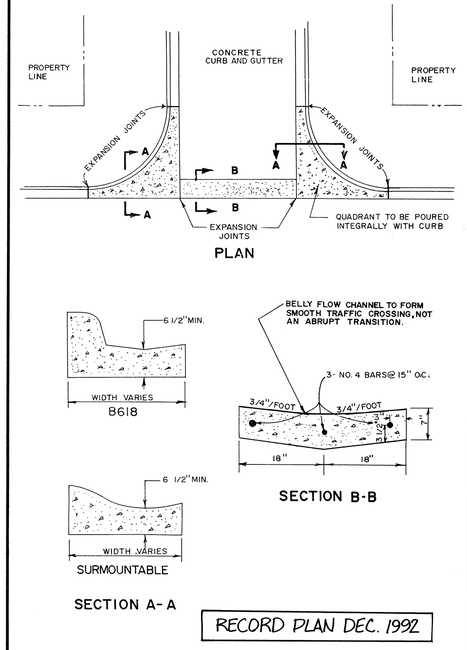

RECORD PLAN DEC. 1992

CONCRETE "V" GUTTER

MINNESOTA BLUEPRINT

WSA Maier Stewart & Associates Inc.
CONSULTING ENGINEERS
1959 SLOAN PLACE (612) 774-6021 ST. PAUL, MINNESOTA 55117

REVISIONS	DATE	DESCRIPTION

DESIGNED ____
CHECKED ____
DRAWN ____
GRAPHIC SCALE
HORIZ. NONE
VERT.

CITY OF ELK RIVER

STREET CONSTRUCTION DETAILS

DATE NOV, 1991 | SHEET 23 OF 23 SHEETS | PROJECT NO. 230-116

DRAWING NUMBER

DRAWING NUMBER

DRAWING NUMBER WESTW.92 23

SAFCO PRODUCTS • NEW HOPE, MINNESOTA REORDER BY PART NUMBER 65050

447