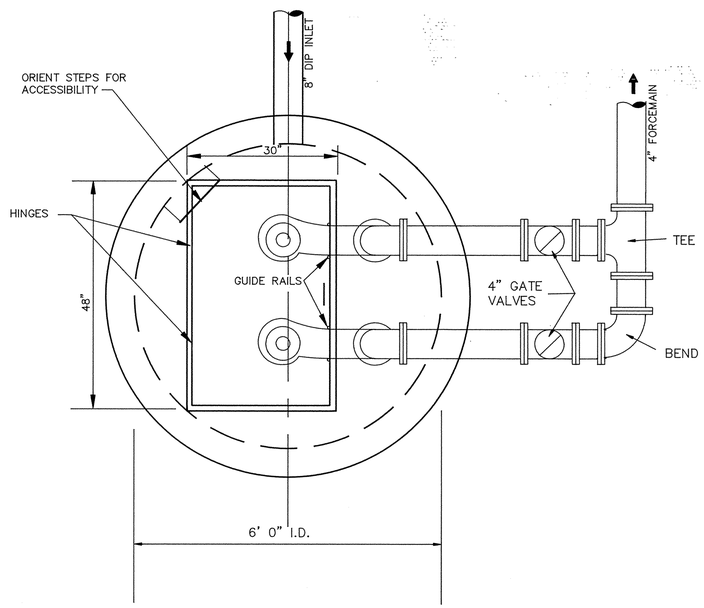

PLAN

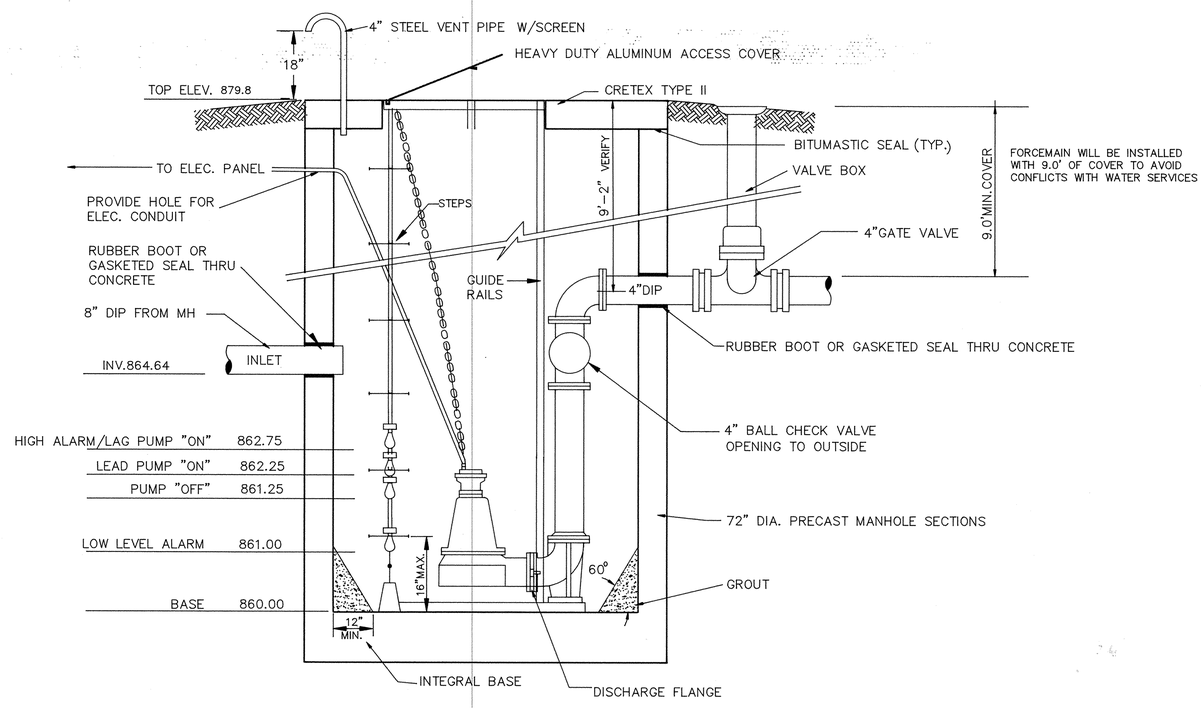

SECTION

LIFT STATION DETAILS

RECORD PLAN DEC. 1992

I HEREBY CERTIFY THAT THIS PLAN, SPECIFICATION, OR REPORT WAS PREPARED BY ME OR UNDER MY DIRECT SUPERVISION AND THAT I AM A DULY REGISTERED PROFESSIONAL ENGINEER UNDER THE LAWS OF THE STATE OF MINNESOTA.

Terry Maurer

DATE 2/4/92 REG NO. 15316

CONSULTING ENGINEERS
Maier Stewart & Associates Inc.
9800 SHELARD PARKWAY (612) 546-0432 MINNEAPOLIS, MINNESOTA 55441
1959 SLOAN PLACE (612) 774-6021 ST. PAUL, MINNESOTA 55117

REVISIONS	DATE	DESCRIPTION

DESIGNED
CHECKED
DRAWN MRJ
GRAPHIC SCALE
HORIZ. NONE
VERT.

CITY OF ELK RIVER
LIFT STATION DETAILS

DATE JAN,1992 SHEET 12 OF 23 SHEETS PROJECT NO. 230-116

ER116-LS

960

DRAWING NUMBER
DRAWING NUMBER
DRAWING NUMBER
DRAWING NUMBER WESTW.92 12