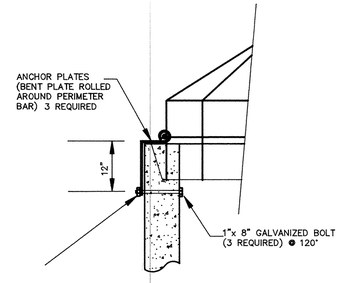

ANCHOR DETAIL

NO SCALE

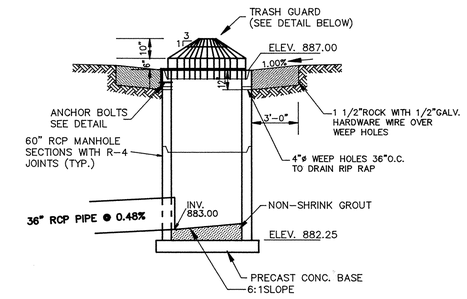

OUTLET STRUCTURE DETAIL

NO SCALE

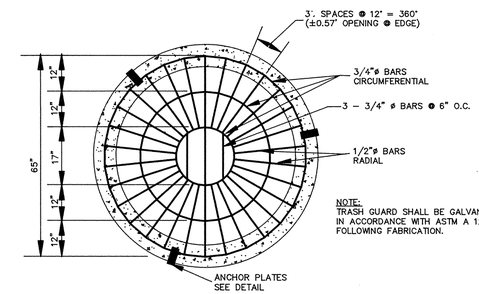

NOTE:
TRASH GUARD SHALL BE GALVANIZED IN ACCORDANCE WITH ASTM A 123 FOLLOWING FABRICATION.

TRASH GUARD DETAIL

NO SCALE

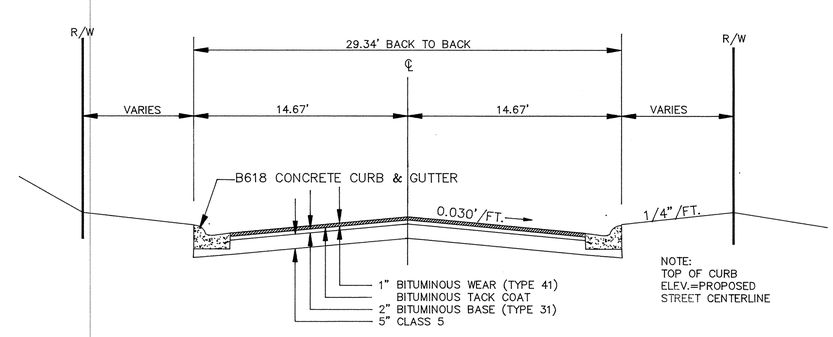

NOTE:
TOP OF CURB ELEV.=PROPOSED STREET CENTERLINE

TYPICAL STREET SECTION

RECORD PLAN DEC. 1992

100 0 100 200 400

PROPOSED FORCEMAIN
PROPOSED WATERMAIN
PROPOSED SANITARY SEWER
PROPOSED STORM SEWER

I HEREBY CERTIFY THAT THIS PLAN, SPECIFICATION, OR REPORT WAS PREPARED BY ME OR UNDER MY DIRECT SUPERVISION AND THAT I AM A DULY REGISTERED PROFESSIONAL ENGINEER UNDER THE LAWS OF THE STATE OF MINNESOTA.

Terry J. Maurer

DATE 2/6/92 REG. NO. 15316

CONSULTING ENGINEERS
Maier Stewart & Associates Inc.
9800 SHELARD PARKWAY (612) 546-0432 MINNEAPOLIS, MINNESOTA 55441
1959 SLOAN PLACE (612) 774-6021 ST. PAUL, MINNESOTA 55117

REVISIONS	DATE	DESCRIPTION

DESIGNED
CHECKED
DRAWN MRJ
GRAPHIC SCALE
HORIZ. 100
VERT.

CITY OF ELK RIVER

SANITARY SEWER, WATERMAIN, STORM SEWER AND STREET CONSTRUCTION LOCATION MAP & DETAILS

DATE JAN.1992 SHEET 2 OF 23 SHEETS PROJECT NO. 230-116

FR116-L

DRAWING NUMBER

DRAWING NUMBER

DRAWING NUMBER

DRAWING NUMBER WESTW.92 2

SAFCO PRODUCTS • NEW HOPE, MINNESOTA REORDER BY PART NUMBER 65503 REPRODUCTION COPIES OF PRINTS ON TYVEK 1.25M