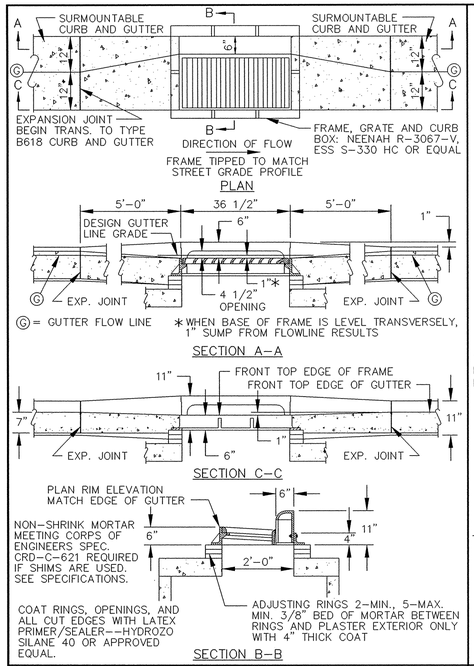

CATCH BASIN FRAME PLACEMENT
SURMOUNTABLE CURB AND GUTTER

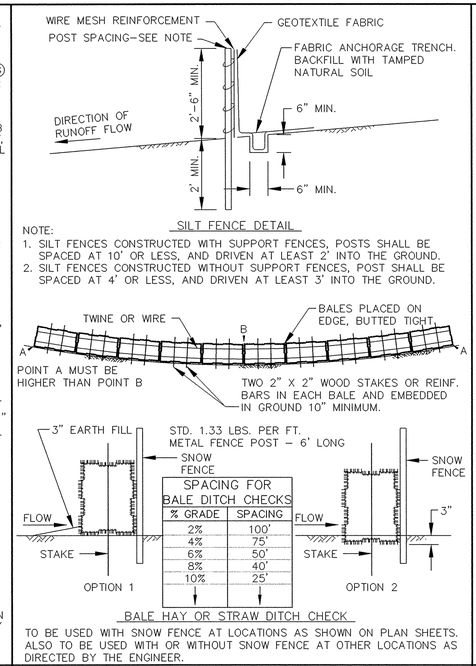

SPACING FOR BALE DITCH CHECKS	
% GRADE	SPACING
2%	100'
4%	75'
6%	50'
8%	40'
10%	25'

TO BE USED WITH SNOW FENCE AT LOCATIONS AS SHOWN ON PLAN SHEETS. ALSO TO BE USED WITH OR WITHOUT SNOW FENCE AT OTHER LOCATIONS AS DIRECTED BY THE ENGINEER.

EROSION CONTROL DETAIL

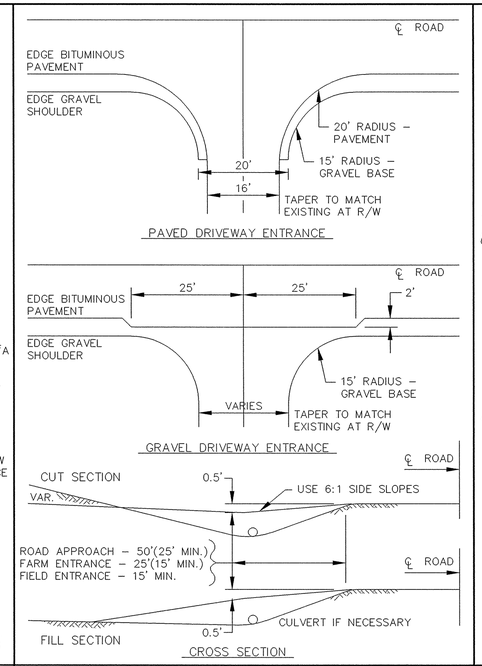

RURAL DRIVEWAY ENTRANCE

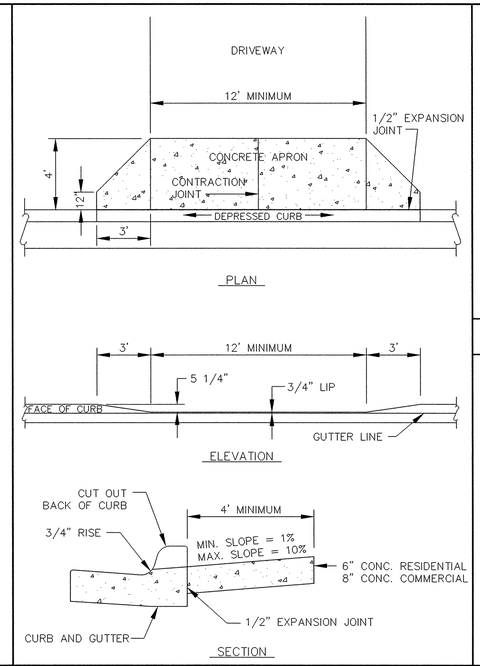

DEPRESSED CURB WITH DRIVEWAY APRON

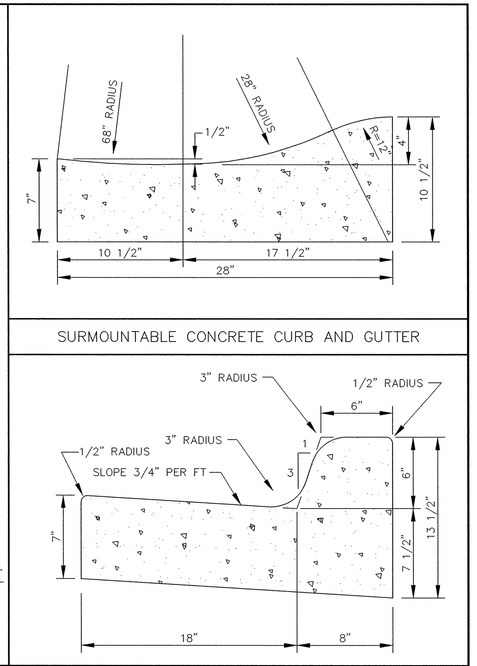

CONCRETE CURB AND GUTTER B618

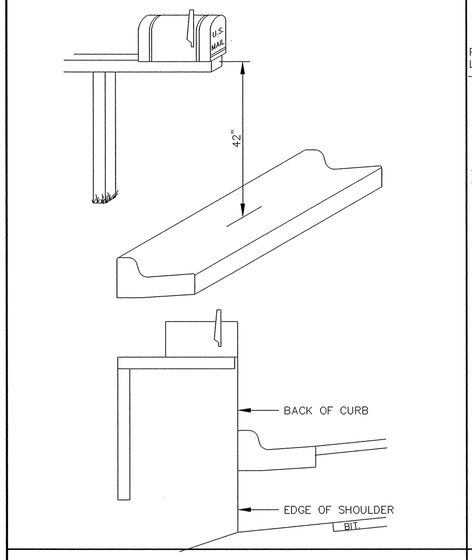

MAIL BOX

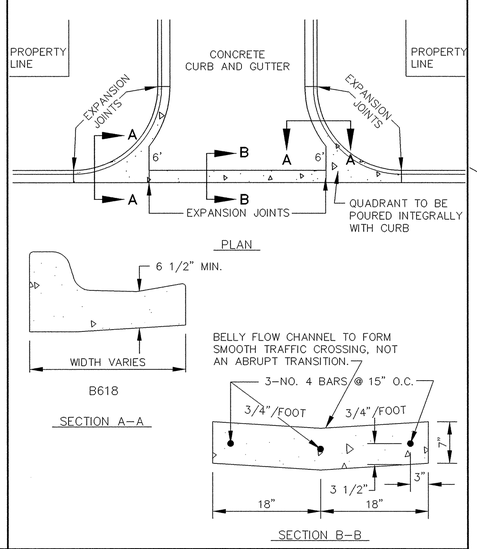

CONCRETE "V" GUTTER

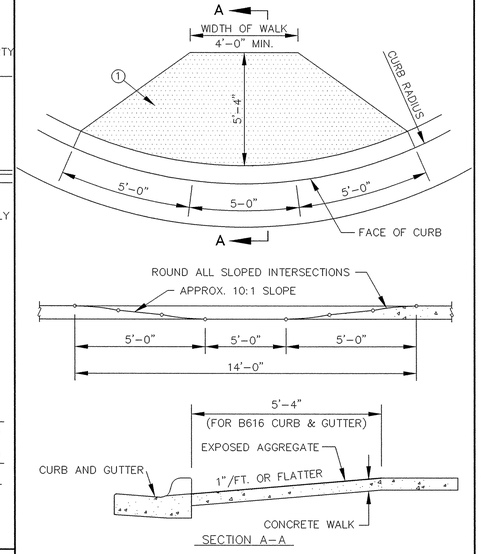

① SURFACE TREATMENT - AFTER NORMAL CONCRETE FINISHING, THE CONCRETE SHALL BE LIGHTLY RINSED TO EXPOSE AGGREGATE. THE EXPOSED AGGREGATE SHALL PROTRUDE AT LEAST 3/16" ABOVE THE CONCRETE SURFACE.

PEDESTRIAN CURB RAMPS FOR SIDEWALKS

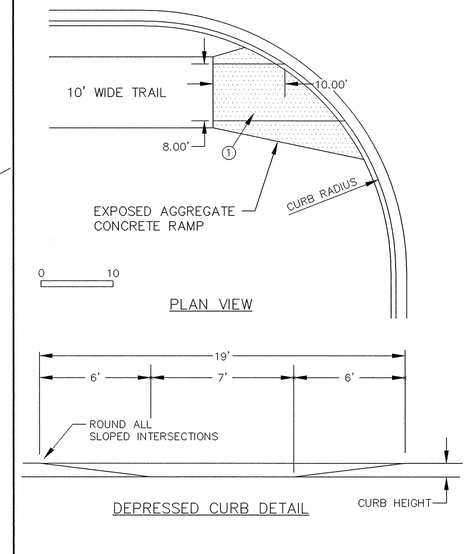

① SURFACE TREATMENT - AFTER NORMAL CONCRETE FINISHING, THE CONCRETE SHALL BE LIGHTLY RINSED TO EXPOSE AGGREGATE. THE EXPOSED AGGREGATE SHALL PROTRUDE AT LEAST 3/16" ABOVE THE CONCRETE SURFACE.

PEDESTRIAN CURB RAMPS FOR TRAILS

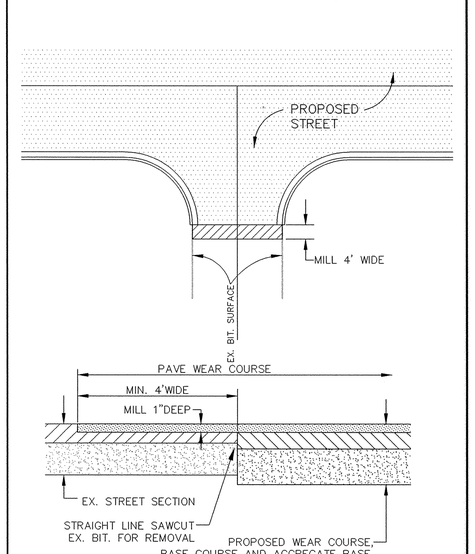

CONTRACTOR: RYAN CONTRACTING CO.

RECORD DRAWING
CONFORMING TO CONSTRUCTION RECORDS.
BY AL SPILLES DATE 05/29/03
WESTWOOD PROFESSIONAL SERVICES, INC.

MATCH EXISTING BITUMINUOUS SURFACING

Westwood Professional Services, Inc.
7599 Anagram Drive
Eden Prairie, MN 55344
Phone: 952/937-5150 Fax: 952/937-5822

PREPARED FOR:
D.R. Horton, INC.
3459 Washington Drive
Suite 204
Eagan, Minnesota 55122

DESIGNED BY: --- DRAWN BY: --
APPROVED: --- JOB NUMBER ---
CAD DATE: April 14, 1999 11:17:32 a.m.
CAD FILE: 230000m\ER-ST.DWG

I HEREBY CERTIFY THAT THIS PLAN, SPECIFICATION, OR REPORT WAS PREPARED BY ME OR UNDER MY DIRECT SUPERVISION AND THAT I AM A DULY REGISTERED PROFESSIONAL ENGINEER UNDER THE LAWS OF THE STATE OF MINNESOTA.

DATE _____ REG.NO. _____

NO.	DATE	BY	REVISION DESCRIPTION
1	05/29/03	GKB	RECORD DRAWING

Howard R. Green Company
CONSULTING ENGINEERS
1326 ENERGY PARK DRIVE
ST. PAUL, MINNESOTA 55108
(612) 644-4389

CITY OF ELK RIVER
TROTT BROOK FARMS 6TH ADDITION
STREET CONSTRUCTION DETAILS

SHEET NO. 17 OF 18

D-11 99605 96050T06.DWG

P:\99403\dwg\RECORD\9403DT06.DWG 05/29/2003 09:15:37 AM CDT

DRAWING NUMBER
SAFCO PRODUCTS • NEW HOPE, MINNESOTA
REORDER BY PART NUMBER 65532

DRAWING NUMBER
SAFCO PRODUCTS • NEW HOPE, MINNESOTA
REORDER BY PART NUMBER 65532

DRAWING NUMBER
SAFCO PRODUCTS • NEW HOPE, MINNESOTA
REORDER BY PART NUMBER 65532

DRAWING NUMBER
TROTT16.02
17

DRAWING NUMBER
SAFCO PRODUCTS • NEW HOPE, MINNESOTA
REORDER BY PART NUMBER 65532