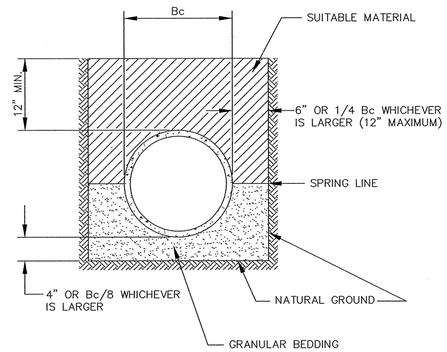

NOTE: ALL COSTS OF EXCAVATION BELOW GRADE AND PLACEMENT OF GRANULAR BEDDING SHALL BE INCLUDED IN THE BID PRICES FOR PIPE ITEMS.

CLASS B PIPE BEDDING

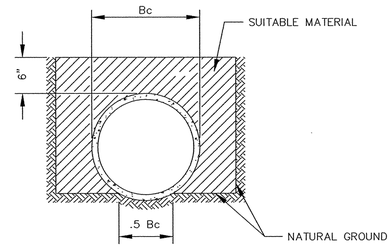

THE BOTTOM OF THE TRENCH SHALL BE SHAPED TO FIT THE PIPE BARREL FOR AT LEAST 50% OF THE OUTSIDE DIAMETER. THE REMAINDER OF THE PIPE IS SURROUNDED TO A HEIGHT OF AT LEAST 6" ABOVE ITS TOP BY SELECT FILL MATERIALS, PLACED BY HAND TOOLS AND COMPACTED TO COMPLETELY FILL ALL SPACES UNDER AND ADJACENT TO THE PIPE.

NOTE: ALL COSTS OF EXCAVATION BELOW GRADE AND PLACEMENT OF GRANULAR BEDDING SHALL BE INCLUDED IN THE BID PRICES FOR PIPE ITEMS.

CLASS C PIPE BEDDING

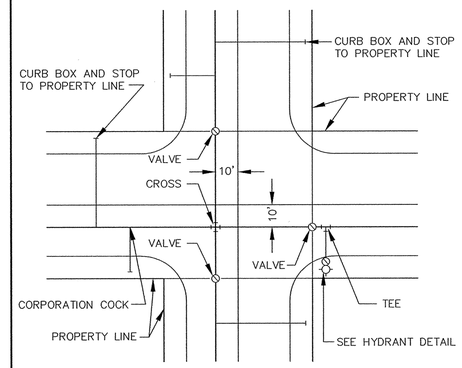

TYPICAL WATER LAYOUT

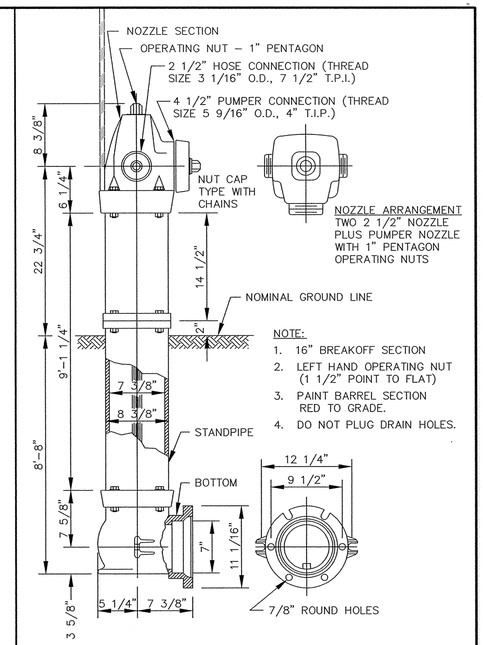

NOTE:
1. 16" BREAKOFF SECTION
2. LEFT HAND OPERATING NUT (1 1/2" POINT TO FLAT)
3. PAINT BARREL SECTION RED TO GRADE.
4. DO NOT PLUG DRAIN HOLES.

NOTE: HYDRANT LOCATING DEVICES REQUIRED – SEE SPECIFICATIONS.

PACER HYDRANT DETAIL

CONTRACTOR: RYAN CONTRACTING, INC.

RECORD DRAWING
CONFORMING TO CONSTRUCTION RECORDS.
BY K. WOOD DATE 3/14/01
WESTWOOD PROFESSIONAL SERVICES

Westwood Professional Services, Inc.
7599 Anagram Drive
Eden Prairie, MN 55344
Phone: 612/937-5150 Fax: 612/937-5822

PREPARED FOR:
D.R. Horton, INC.
3459 Washington Drive
Suite 204
Eagan, Minnesota 55122

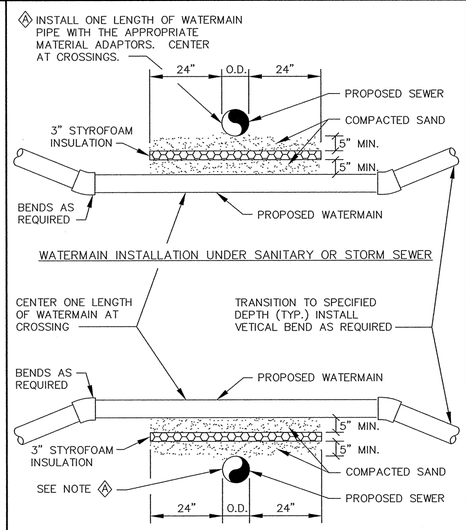

NOTES:
1. WHEN WATERMAIN AND SANITARY SEWER CROSSINGS HAVE LESS THAN 18" VERTICAL SEPARATION, INSTALL CROSSING AS SHOWN.
2. WHEN WATERMAIN COVER IS LESS THAN 7.5 FEET, INSTALL WATERMAIN UNDER SANITARY SEWER.

WATERMAIN CROSSING

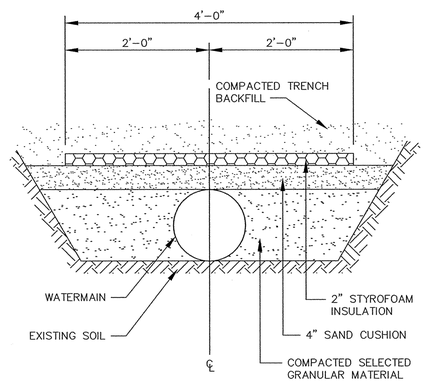

PIPE INSULATION DETAIL

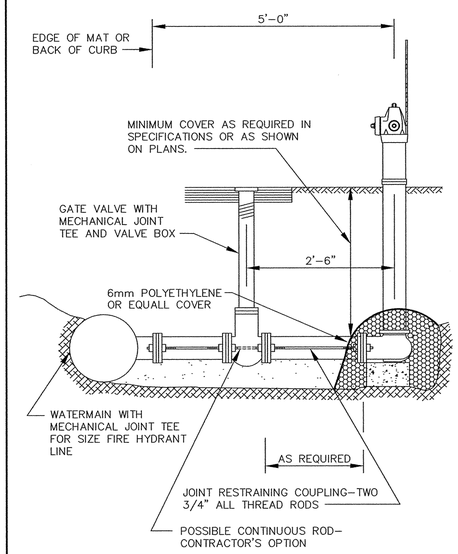

NOTE: HYDRANT LEADS SHALL BE RODDED FROM MAIN LINE TO HYDRANT UNLESS SPECIFIED OTHERWISE.

RODDING DETAIL

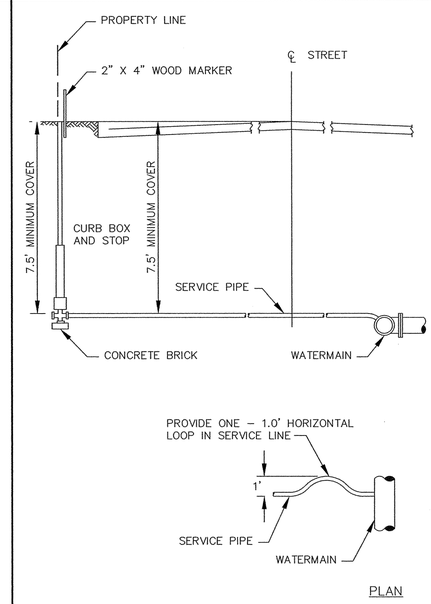

TYPICAL SERVICE DETAIL

DESIGNED BY: ---	DRAWN BY: --
APPROVED: ---	JOB NUMBER ---
CAD DATE: April 14, 1999 11:14:59 a.m.	
CAD FILE: 230000m\ER-SM.DWG	

I HEREBY CERTIFY THAT THIS PLAN, SPECIFICATION, OR REPORT WAS PREPARED BY ME OR UNDER MY DIRECT SUPERVISION AND THAT I AM A DULY REGISTERED PROFESSIONAL ENGINEER UNDER THE LAWS OF THE STATE OF MINNESOTA.

DATE _____ REG.NO. _____

NO.	DATE	BY	REVISION DESCRIPTION

Howard R. Green Company
CONSULTING ENGINEERS
1326 ENERGY PARK DRIVE
ST. PAUL, MINNESOTA 55108
(612) 644-4389

CITY OF ELK RIVER
TROTT BROOK FARMS
WATERMAIN DETAILS

SHEET NO. 9 OF 11

D-11 99605 9605DLT2.DWG

P:\99605\dwg\As-Built\9605DT@2.dwg 03/16/01 08:22:20 AM CST

DRAWING NUMBER
SAFCO PRODUCTS • NEW HOPE, MINNESOTA
REORDER BY PART NUMBER 60502
POSITIVE COLOR OF PAINT ON THIS LINE

DRAWING NUMBER
SAFCO PRODUCTS • NEW HOPE, MINNESOTA
REORDER BY PART NUMBER 60502
POSITIVE COLOR OF PAINT ON THIS LINE

DRAWING NUMBER
SAFCO PRODUCTS • NEW HOPE, MINNESOTA
REORDER BY PART NUMBER 60502
POSITIVE COLOR OF PAINT ON THIS LINE

DRAWING NUMBER TROTT5.00 9
SAFCO PRODUCTS • NEW HOPE, MINNESOTA
REORDER BY PART NUMBER 60502
POSITIVE COLOR OF PAINT ON THIS LINE