©1999 Westwood Professional Services, Inc.

CONTRACTOR: RYAN CONTRACTING, INC.

RECORD DRAWING
CONFORMING TO CONSTRUCTION RECORDS.
BY S. HUTTNER DATE 7/20/01
WESTWOOD PROFESSIONAL SERVICES

Call 48 Hours before digging:
GOPHER STATE ONE CALL
Twin City Area 651-454-0002
Mn. Toll Free 1-800-252-1166

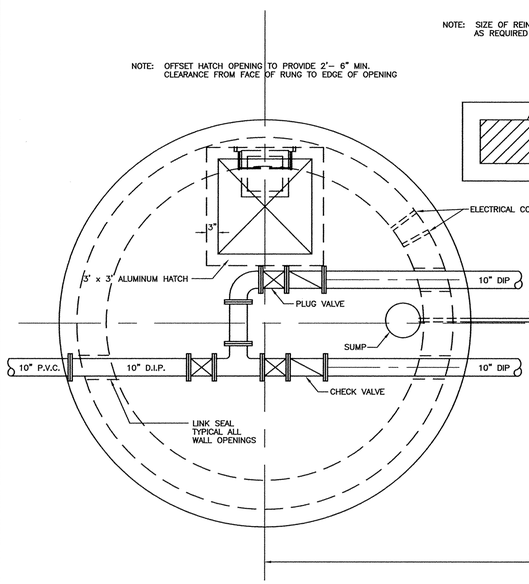

PLAN VIEW - VALVE VAULT

NOT TO SCALE

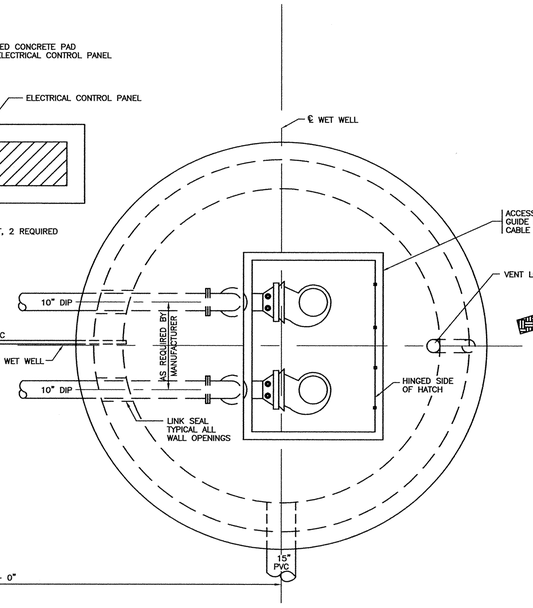

PLAN VIEW - WET WELL

NOT TO SCALE

SECTION - VALVE VAULT

NOT TO SCALE

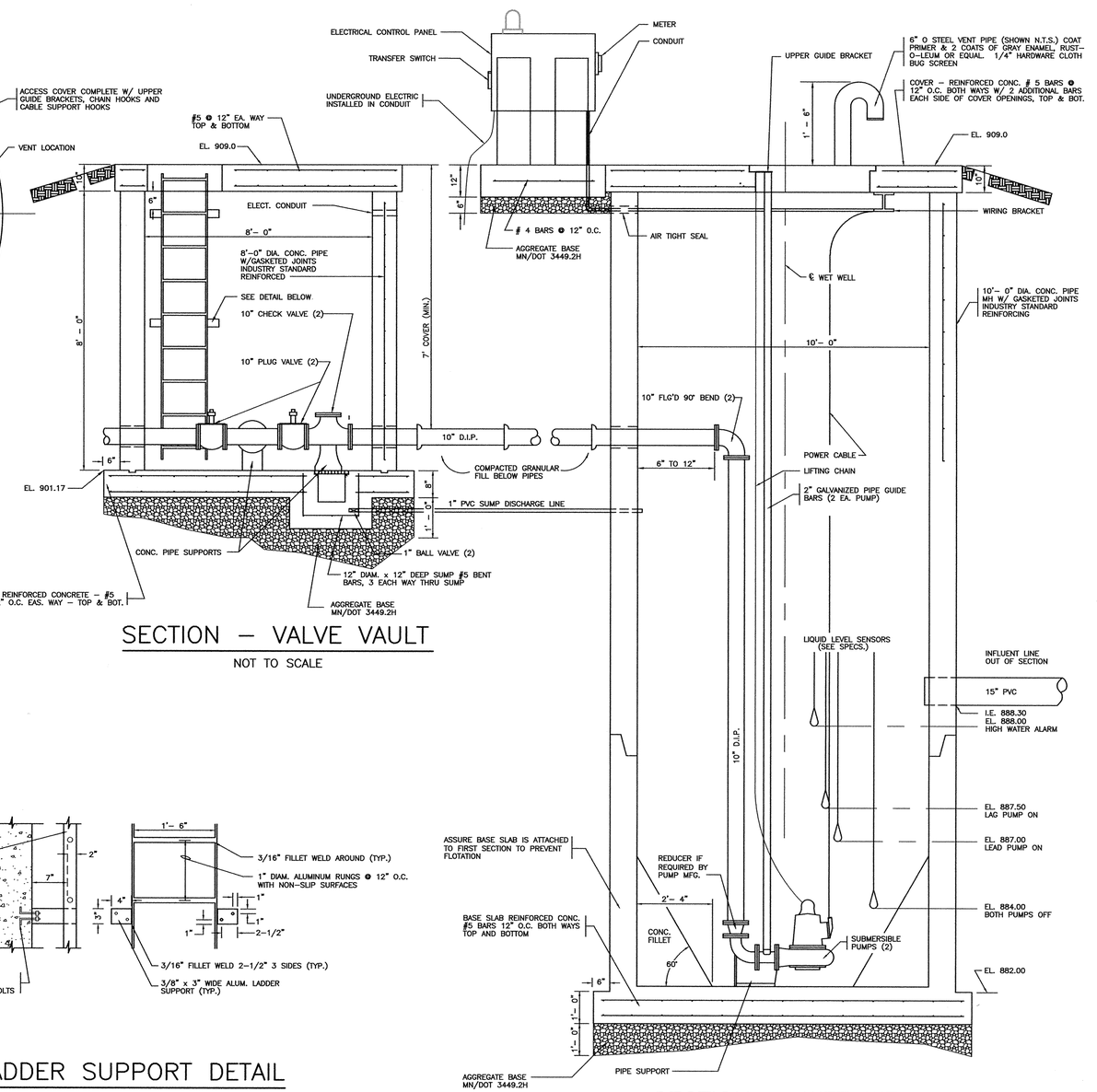

SECTION - WET WELL

NOT TO SCALE

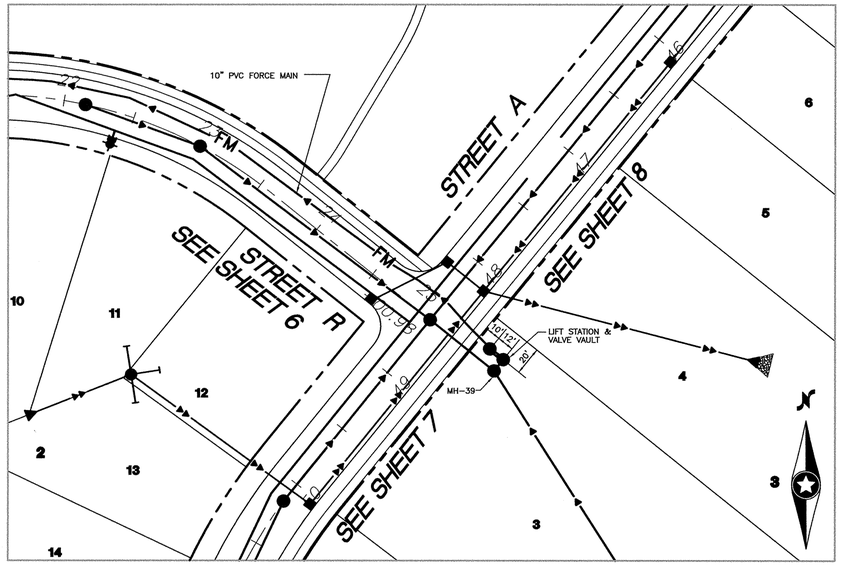

PLAN VIEW

NOT TO SCALE

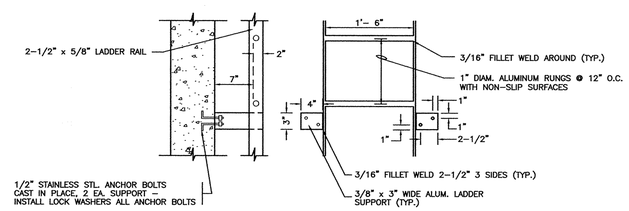

LADDER SUPPORT DETAIL

NOT TO SCALE

REVISIONS
6/28/99
7/27/99 PER CITY REDLINES

Westwood
Westwood Professional Services, Inc
104 Marty Drive, Suite 3
Buffalo, MN 55313
612 682-2587

I hereby certify that this plan was prepared by me or under my direct supervision and that I am a duly registered PROFESSIONAL ENGINEER under the laws of the State of Minnesota.

DATE _____ REG. NO. _____

DESIGNED	LAW	CHECKED	LAW
DRAWN	RC	RECORD DRAWING BY/DATE	

PREPARED FOR:
D.R. Horton
3459 Washington Drive
Suite 204
Eagan, Minnesota 55122

Trott Brook Farms
Elk River, Minnesota

Lift Station Detail

LATEST REVISION DATE: 7/27/99

DATE 6/1/99
SHEET 26 OF 32

96367 6367LS@1.DWG

DRAWING NUMBER
TROTT1-4.99
26

DRAWING NUMBER

DRAWING NUMBER

DRAWING NUMBER

SAFCO PRODUCTS • NEW HOPE, MINNESOTA
REORDER BY PART NUMBER 65362