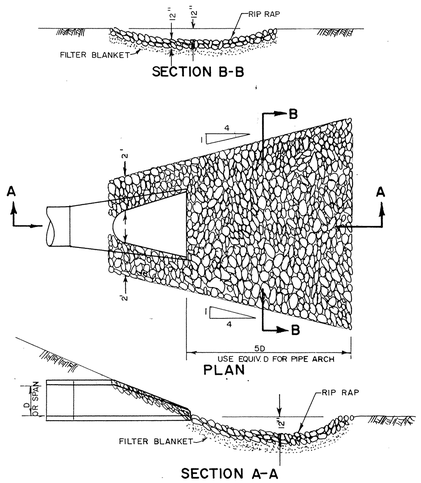

RIP-RAP INSTALLATION

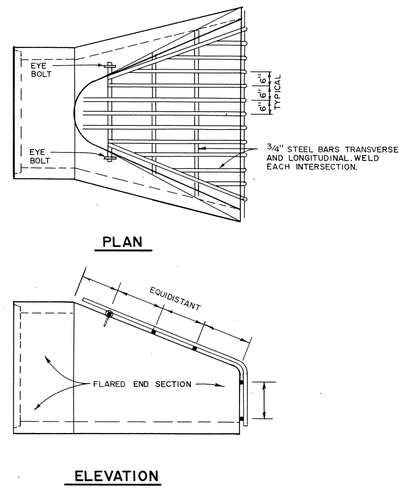

TRASH GUARD

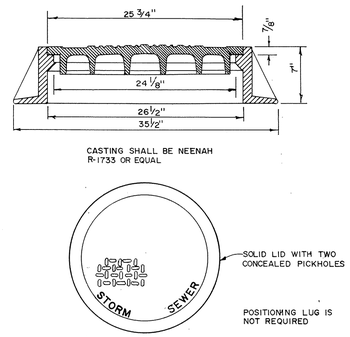

STANDARD MANHOLE CASTING

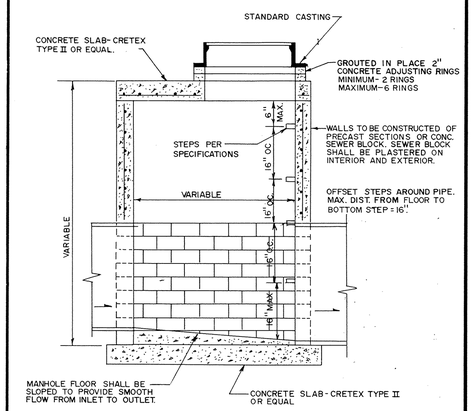

SLAB-TOP MANHOLE

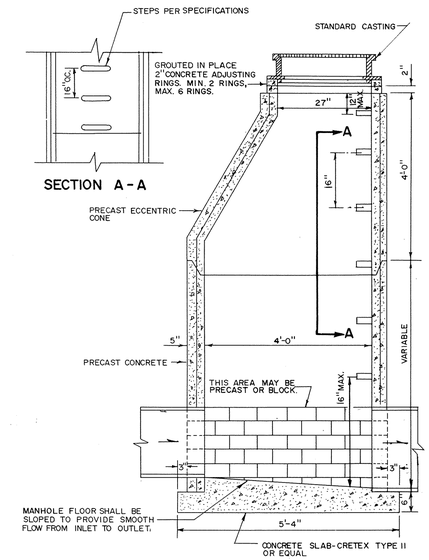

STANDARD MANHOLE

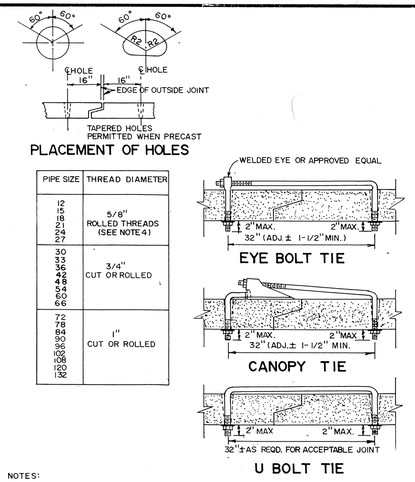

PIPE SIZE	THREAD DIAMETER
12 15 18 21 24 27	5/8" ROLLED THREADS (SEE NOTE 4)
30 33 36 42 48 54 60 66	3/4" CUT OR ROLLED
72 78 84 90 96 102 108 120 132	1" CUT OR ROLLED

NOTES:

1. HOLES SHALL BE CAST-IN OR DRILLED 16" FROM OUTSIDE EDGE OF JOINT.
2. NUTS AND WASHERS ARE NOT REQUIRED ON INSIDE OF PIPE WITH 27" DIAM. OR LESS.
3. TIES ARE NOT REQUIRED FOR BELL PIPE 24" AND SMALLER. ON OTHER SIZES, TIE MAY BE INSERTED FROM INSIDE.
4. CUT THREADS MAY BE USED IF WASHER AND NUT ARE USED.
5. PIPE SIZES LISTED ARE INSIDE DIAM. OF ROUND PIPE OR EQUIVALENT DIAM. OF PIPE ARCH.

CONCRETE PIPE JOINT TIES

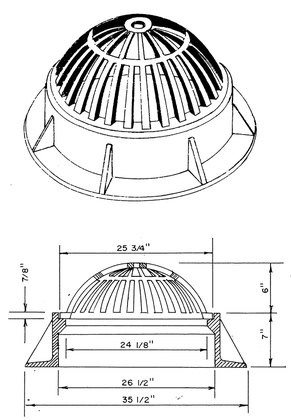

BEEHIVE CASTING

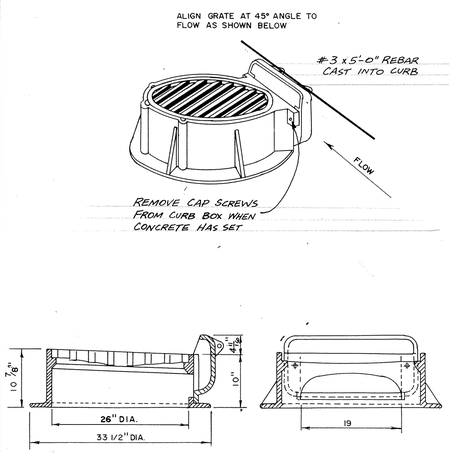

STANDARD INLET CASTING

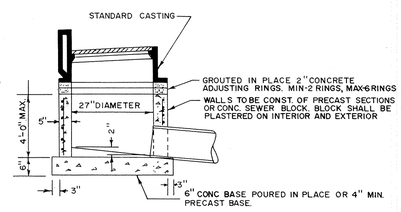

RECORD PLAN NOV. 1988

SHALLOW CATCH BASIN

MSA Maier Stewart & Associates Inc.
CONSULTING ENGINEERS
1959 SLOAN PLACE (612) 774-6021 ST. PAUL, MINNESOTA 55117

REVISIONS	DATE	DESCRIPTION

DESIGNED ____
CHECKED ____
DRAWN MRJ
GRAPHIC SCALE
HORIZ. None
VERT.

CITY OF ELK RIVER

STORM SEWER DETAILS

DATE MARCH 1988 | SHEET 16 OF 17 SHEETS | PROJECT NO. 230-032

DRAWING NUMBER
ROYAL 88
16

SAFCO PRODUCTS • NEW HOPE, MINNESOTA
REORDER BY PART NUMBER 63532
POSITION EDGE OF PRINT ON THIS LINE

DRAWING NUMBER

DRAWING NUMBER

MINNESOTA BLUEPRINT