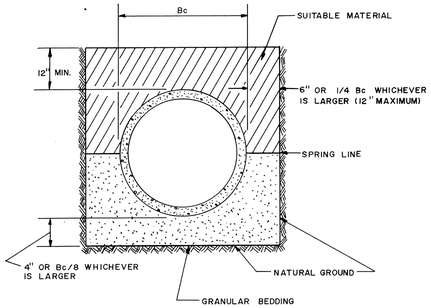

NOTE: ALL COSTS OF EXCAVATION BELOW GRADE AND PLACEMENT OF GRANULAR BEDDING SHALL BE INCLUDED IN THE BID PRICES FOR PIPE ITEMS.

CLASS B PIPE BEDDING

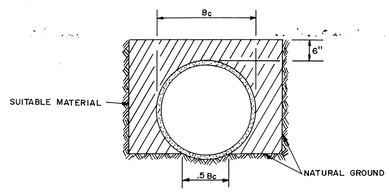

THE BOTTOM OF THE TRENCH SHALL BE SHAPED TO FIT THE PIPE BARREL FOR AT LEAST 50% OF THE OUTSIDE DIAMETER. THE REMAINDER OF THE PIPE IS SURROUNDED TO A HEIGHT OF AT AT LEAST 6" ABOVE ITS TOP BY SELECT FILL MATERIALS, PLACED BY HAND TOOLS AND COMPACTED TO COMPLETELY FILL ALL SPACES UNDER AND ADJACENT TO THE PIPE.

NOTE: ALL COSTS OF EXCAVATION BELOW GRADE AND PLACEMENT OF GRANULAR BEDDING SHALL BE INCLUDED IN THE BID PRICES FOR PIPE ITEMS.

CLASS C PIPE BEDDING

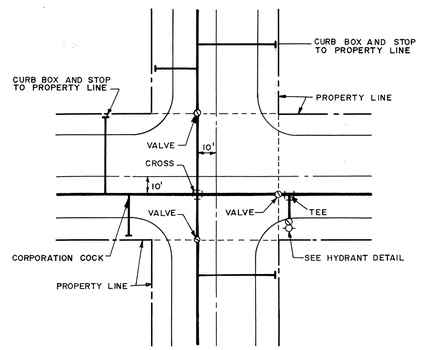

TYPICAL WATER LAYOUT

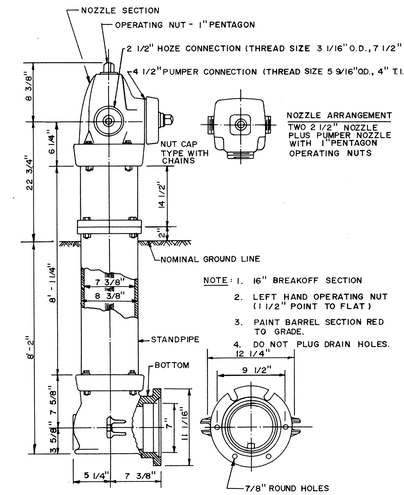

NOTE:
1. 16" BREAKOFF SECTION
2. LEFT HAND OPERATING NUT (11 1/2" POINT TO FLAT)
3. PAINT BARREL SECTION RED TO GRADE.
4. DO NOT PLUG DRAIN HOLES.

PACER HYDRANT DETAIL

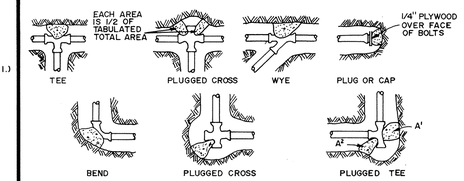

NOMINAL FITTING SIZE, INCHES	TEE, WYE, PLUG OR CAP	90° BEND, PLUGGED CROSS	TEE PLUGGED ON RUN		45° BEND	22 1/2° BEND	11 1/4° BEND
			A'	A²			
4	1.0	1.4	1.9	1.4	1.0	—	—
6	2.1	3.0	4.3	3.0	1.6	1.0	—
8	3.8	5.3	7.6	5.4	2.9	1.5	1.0
10	5.9	8.4	11.8	8.4	4.6	2.6	1.2
12	8.5	12.0	17.0	12.0	6.6	3.4	1.7
14	11.5	16.3	23.0	16.3	8.9	4.6	2.3
16	15.0	21.3	30.0	21.3	11.6	6.0	3.0
18	19.0	27.0	38.0	27.0	14.6	7.6	3.8
20	23.5	33.3	47.0	33.3	18.1	9.4	4.7
24	34.0	48.0	68.0	48.0	26.2	13.6	6.8

NOTE:
1. CONCRETE THRUST BLOCKING TO BE POURED AGAINST UNDISTURBED EARTH.
2. KEEP CONCRETE CLEAR OF JOINT AND ACCESSORIES.
3. IF NOT SHOWN ON PLANS, REQUIRED BEARING AREAS AT FITTING SHALL BE AS INDICATED ABOVE, ADJUSTED IF NECESSARY, TO CONFORM TO THE TEST PRESSURE (S) AND ALLOWABLE SOIL BEARING STRESS (ES).
4. BEARING AREAS AND SPECIAL BLOCKING DETAILS SHOWN ON PLANS TAKE TAKE PRECEDENCE OVER BEARING AREAS AND BLOCKING DETAILS SHOWN THIS STANDARD DETAIL.
5. ABOVE BEARING AREAS BASED ON TEST PRESSURE OF 150 P.S.I. AND AN ALLOWABLE SOIL BEARING STRESS OF 2000 POUNDS PER SQUARE FOOT. TO COMPUTE BEARING AREAS FOR DIFFERENT TEST PRESSURES AND SOIL BEARING STRESSES, USE THE FOLLOWING EQUATION: BEARING AREA = (TEST PRESURE / 150) x (2000 / SOIL BEARING STRESS) x (TABLE VALUE)

THRUST BLOCKING DETAIL

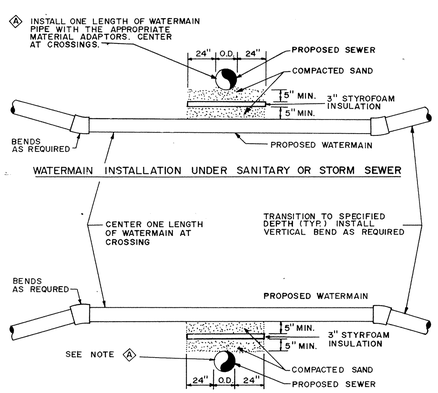

NOTES:
1. WHEN WATERMAIN AND SANITARY SEWER CROSSINGS HAVE LESS THAN 18" VERTICAL SEPARATION, INSTALL CROSSING AS SHOWN.
2. WHEN WATERMAIN COVER IS LESS THAN 7.5 FEET, INSTALL WATERMAIN UNDER SANITARY SEWER.

WATERMAIN CROSSING

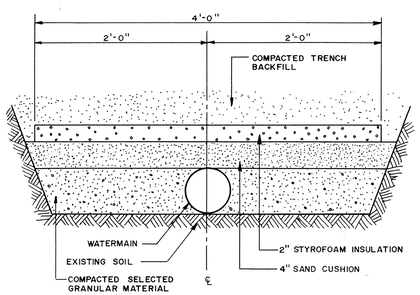

PIPE INSULATION DETAIL

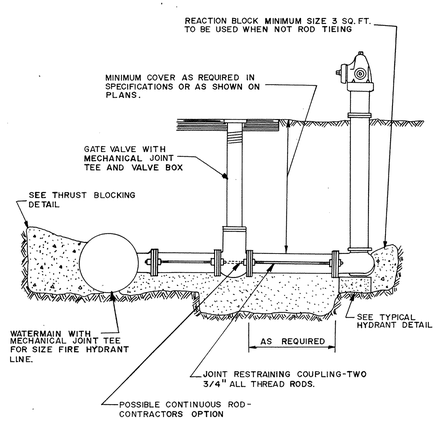

RODDING DETAIL

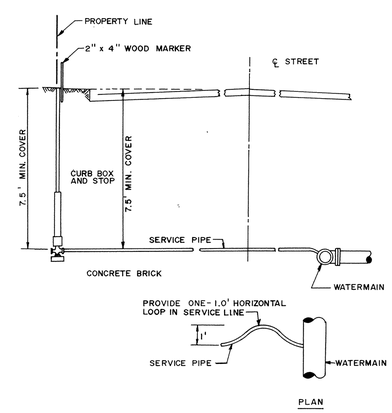

TYPICAL SERVICE DETAIL

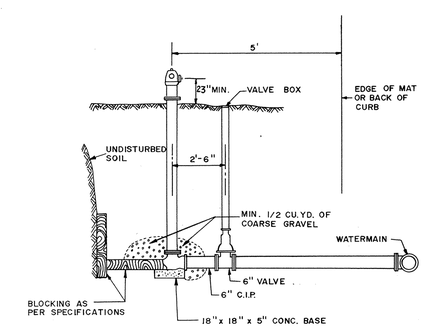

RECORD PLAN NOV. 1988

TYPICAL HYDRANT DETAIL

MSA Maier Stewart & Associates Inc.
CONSULTING ENGINEERS
1959 SLOAN PLACE (612) 774-6021 ST. PAUL, MINNESOTA 55117

REVISIONS	DATE	DESCRIPTION

DESIGNED ____
CHECKED ____
DRAWN MRI
GRAPHIC SCALE
HORIZ. NONE
VERT.

CITY OF ELK RIVER

WATERMAIN DETAILS

DATE MARCH 1988 | SHEET 15 OF 17 SHEETS | PROJECT NO. 230-034

DRAWING NUMBER
SAFCO PRODUCTS • NEW HOPE, MINNESOTA
REORDER BY PART NUMBER 55302
POSITION CODE OF PRINT ON THIS LINE

DRAWING NUMBER
SAFCO PRODUCTS • NEW HOPE, MINNESOTA
REORDER BY PART NUMBER 55302
POSITION CODE OF PRINT ON THIS LINE

DRAWING NUMBER
SAFCO PRODUCTS • NEW HOPE, MINNESOTA
REORDER BY PART NUMBER 55302
POSITION CODE OF PRINT ON THIS LINE

DRAWING NUMBER
ROYAL 88
15
SAFCO PRODUCTS • NEW HOPE, MINNESOTA
REORDER BY PART NUMBER 55302
POSITION CODE OF PRINT ON THIS LINE

MINNESOTA BLUEPRINT