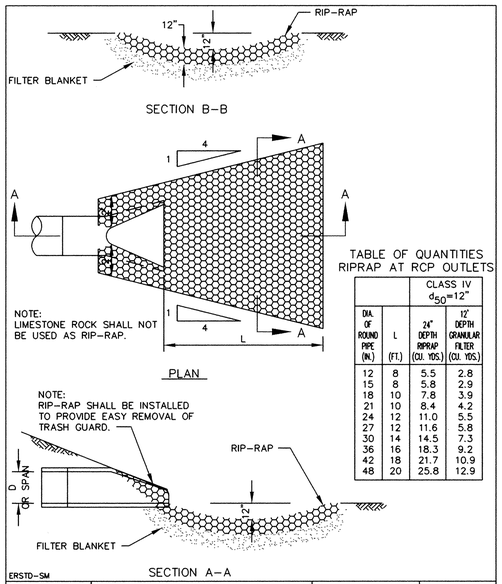

TABLE OF QUANTITIES
RIPRAP AT RCP OUTLETS

DIA. OF ROUND PIPE (IN.)	L (FT.)	CLASS IV d_{50}=12" 24" DEPTH RIPRAP (CU. YDS.)	12" DEPTH GRANULAR FILTER (CU. YDS.)
12	8	5.5	2.8
15	8	5.8	2.9
18	10	7.8	3.9
21	10	8.4	4.2
24	12	11.0	5.5
27	12	11.6	5.8
30	14	14.5	7.3
36	16	18.3	9.2
42	18	21.7	10.9
48	20	25.8	12.9

ERSTD-SM

Howard R. Green Company CONSULTING ENGINEERS | RIP-RAP INSTALLATION | City of Elk River | STANDARD PLATE NO. 2505

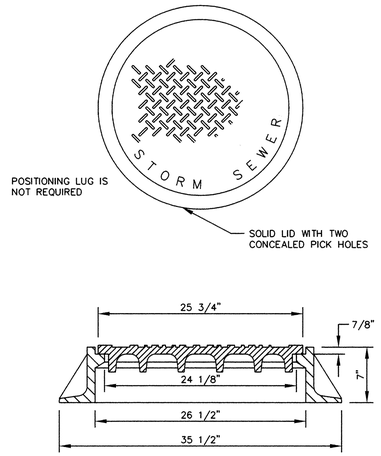

CASTING SHALL BE NEENAH R-1733 OR EQUAL

ERSTD-SM

Howard R. Green Company CONSULTING ENGINEERS | STANDARD MANHOLE CASTING | City of Elk River | STANDARD PLATE NO. 2506

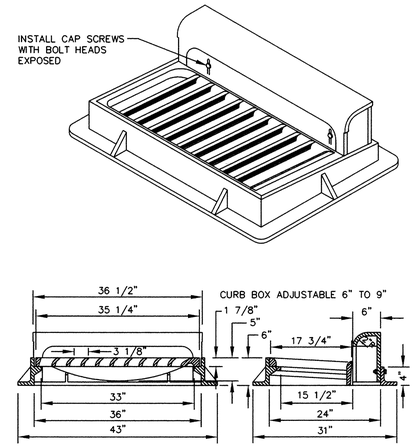

CASTINGS SHALL BE NEENAH R-3067-V OR EQUAL

ERSTD-SM

Howard R. Green Company CONSULTING ENGINEERS | STANDARD INLET CASTING | City of Elk River | STANDARD PLATE NO. 2507

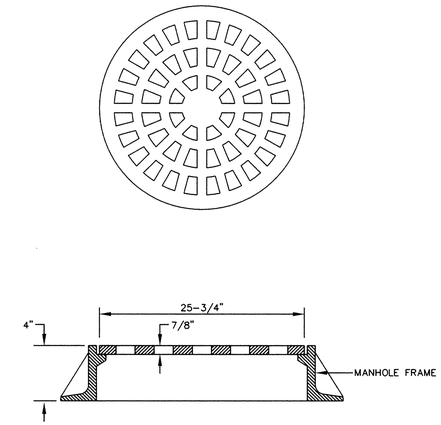

CASTING SHALL BE NEENAH R-1733-1 TYPE C OR EQUAL FOR YARDS
CASTING NEENAH R-4342 TYPE C FOR DITCHES

ERSTD-SM

Howard R. Green Company CONSULTING ENGINEERS | GRATE CASTING | City of Elk River | STANDARD PLATE NO. 2509

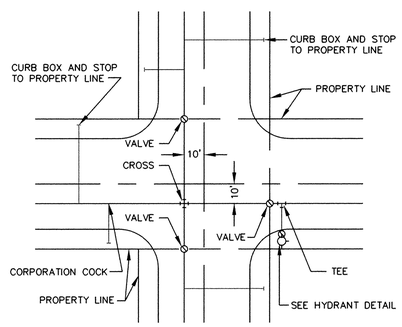

ERSTD-WM

Howard R. Green Company CONSULTING ENGINEERS | TYPICAL WATER LAYOUT | City of Elk River | STANDARD PLATE NO. 3400

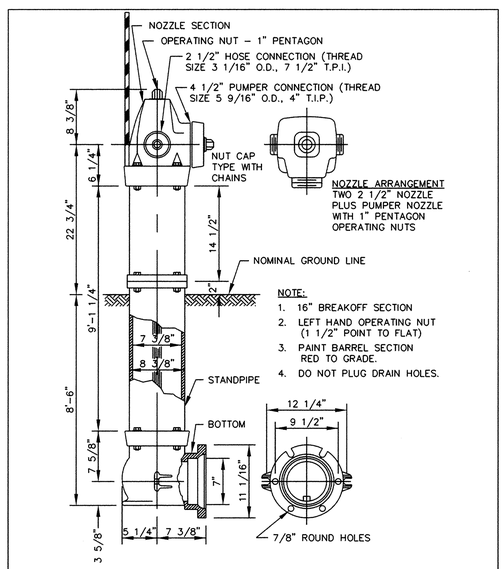

NOTE:
1. 16" BREAKOFF SECTION
2. LEFT HAND OPERATING NUT (1 1/2" POINT TO FLAT)
3. PAINT BARREL SECTION RED TO GRADE.
4. DO NOT PLUG DRAIN HOLES.

ERSTD-WM

NOTE: HYDRANT LOCATING DEVICES REQUIRED – SEE SPECIFICATIONS.

Howard R. Green Company CONSULTING ENGINEERS | PACER HYDRANT DETAIL | City of Elk River | STANDARD PLATE NO. 3401

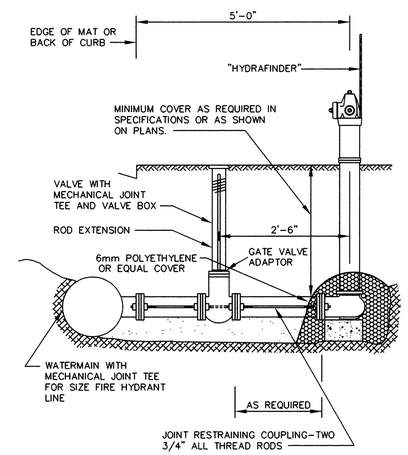

NOTE: ALL HYDRANT LEADS SHALL BE RESTRAINED FROM THE MAIN TO THE HYDRANT THROUGH THE USE OF THREADED RODS OR MEGALUGS AS RESTRAINTS IN ACCORDANCE WITH THE STANDARD DETAIL PLATES.

ERSTD-WM

Howard R. Green Company CONSULTING ENGINEERS | RODDING DETAIL | City of Elk River | STANDARD PLATE NO. 3402

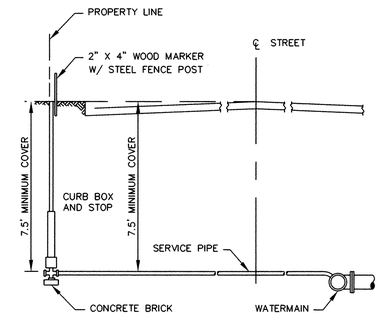

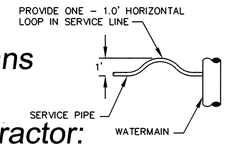

PLAN

Record Plans
2-02-05
Utility Contractor:
Hennen Construction

ERSTD-WM

Howard R. Green Company CONSULTING ENGINEERS | TYPICAL SERVICE DETAIL | City of Elk River | STANDARD PLATE NO. 3403

NO.	DATE	BY	DESCRIPTION

REVISIONS

DESIGNED M.P.C. DRAWN M.L.H. CHECKED M.P.C.

I HEREBY CERTIFY THAT THIS PLAN, SPECIFICATION, OR REPORT WAS PREPARED BY ME OR UNDER MY DIRECT SUPERVISION AND THAT I AM A DULY LICENSED PROFESSIONAL ENGINEER UNDER THE LAWS OF THE STATE OF MINNESOTA.

Martin P. Campidoglio
DATE: 7/14/04 LICENSE # 19901

OTTO ASSOCIATES
Engineers and Land Surveyors, Inc.
Web Site: www.ottoassociates.com
9 West Division St.
Buffalo, MN 55313
Ph: (763)682-4727
Fax: (763)682-3522

PRESTIGIOUS WOODLAND HILLS
BREUER FAMILY LLP
ELK RIVER, MN

DETAILS

SHEET NO. 13 OF 14 SHEETS

PROJECT NO: 2-02-0628
DATE: 9/23/04

DRAWING NUMBER
SAFCO PRODUCTS • NEW HOPE, MINNESOTA
REORDER BY PART NUMBER 6502
PROTECTION CODE OF PRINT ON THIS LINE

DRAWING NUMBER
SAFCO PRODUCTS • NEW HOPE, MINNESOTA
REORDER BY PART NUMBER 6502
PROTECTION CODE OF PRINT ON THIS LINE

DRAWING NUMBER
SAFCO PRODUCTS • NEW HOPE, MINNESOTA
REORDER BY PART NUMBER 6502
PROTECTION CODE OF PRINT ON THIS LINE

DRAWING NUMBER
P:\YDHLS.04
13
SAFCO PRODUCTS • NEW HOPE, MINNESOTA
REORDER BY PART NUMBER 6502
PROTECTION CODE OF PRINT ON THIS LINE