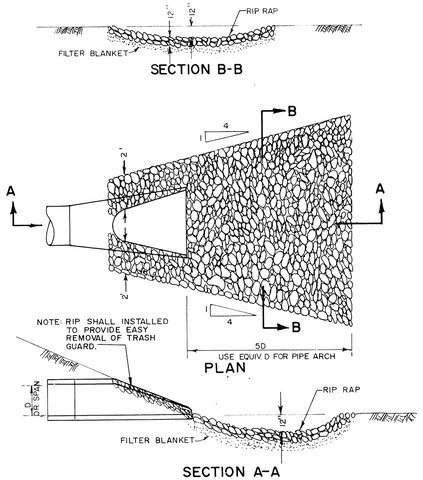

RIP-RAP INSTALLATION

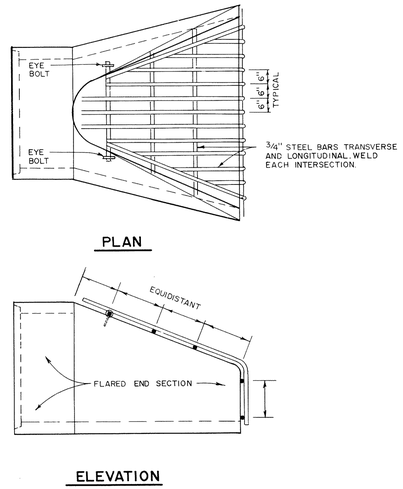

TRASH GUARD

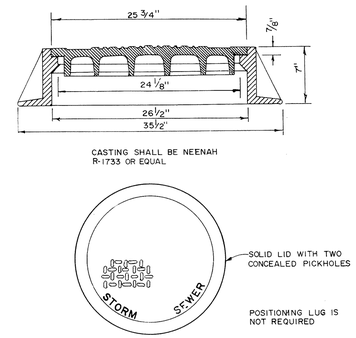

STANDARD MANHOLE CASTING

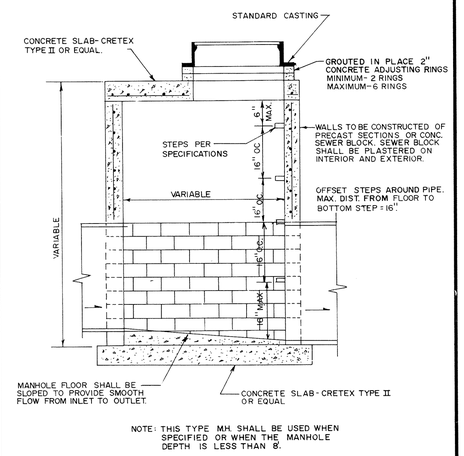

SLAB-TOP MANHOLE

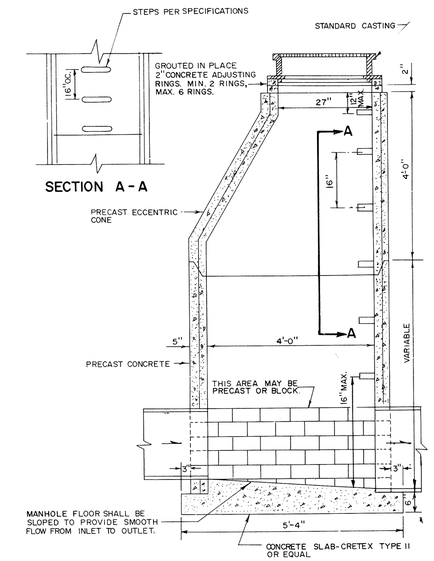

STANDARD MANHOLE

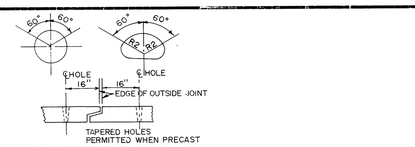

PLACEMENT OF HOLES

PIPE SIZE	THREAD DIAMETER
12, 15, 18, 21, 24, 27	5/8" ROLLED THREADS (SEE NOTE 4)
30, 33, 36, 42, 48, 54, 60, 66	3/4" CUT OR ROLLED
72, 78, 84, 90, 96, 102, 108, 120, 132	1" CUT OR ROLLED

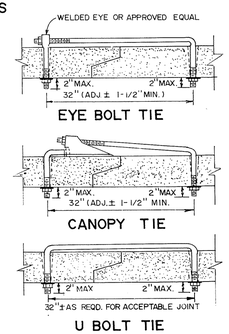

NOTES:

1. HOLES SHALL BE CAST-IN OR DRILLED 16" FROM OUTSIDE EDGE OF JOINT.
2. NUTS AND WASHERS ARE NOT REQUIRED ON INSIDE OF PIPE WITH 27" DIAM. OR LESS.
3. TIES ARE NOT REQUIRED FOR BELL PIPE 24" AND SMALLER. ON OTHER SIZES, TIE MAY BE INSERTED FROM INSIDE.
4. CUT THREADS MAY BE USED IF WASHER AND NUT ARE USED.
5. PIPE SIZES LISTED ARE INSIDE DIAM. OF ROUND PIPE OR EQUIVALENT DIAM. OF PIPE ARCH

CONCRETE PIPE JOINT TIES

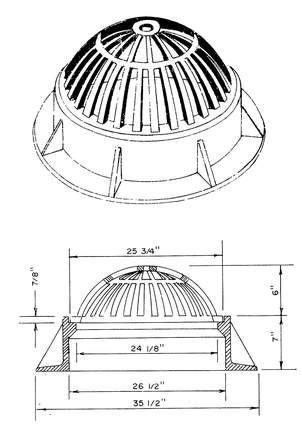

BEEHIVE CASTING

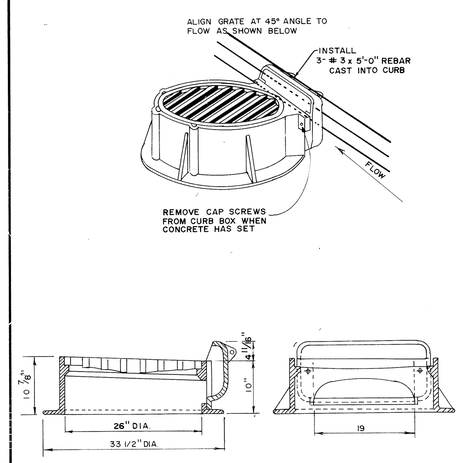

STANDARD INLET CASTING

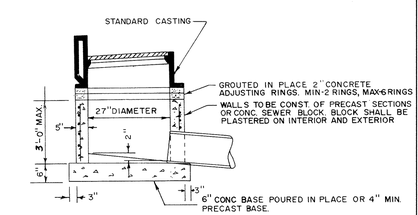

NOTE: REINFORCING SHALL CONSIST OF A SINGLE LINE OF STEEL WIRE FABRIC HAVING AN AREA OF NOT LESS THAN 0.17 SQ IN. PER FOOT OF HEIGHT.

RECORD PLAN
JUNE 1994

SHALLOW CATCH BASIN

MSA Maier Stewart & Associates Inc.
CONSULTING ENGINEERS
1959 SLOAN PLACE (612) 774-6021 ST. PAUL, MINNESOTA 55117

REVISIONS	DATE	DESCRIPTION

DESIGNED FEB
CHECKED JES
DRAWN MRJ
GRAPHIC SCALE
HORIZ. NONE
VERT.

CITY OF ELK RIVER
STREET CONSTRUCTION
MAIN STREET AT TH 169
S.A.P. 204-113-05
STORM SEWER DETAILS

DATE MARCH, 1991 | SHEET 13 OF 17 SHEETS | PROJECT NO. 230-099

DRAWING NUMBER MAINS 92 13

DRAWING NUMBER

DRAWING NUMBER

DRAWING NUMBER

MINNESOTA BLUEPRINT

662