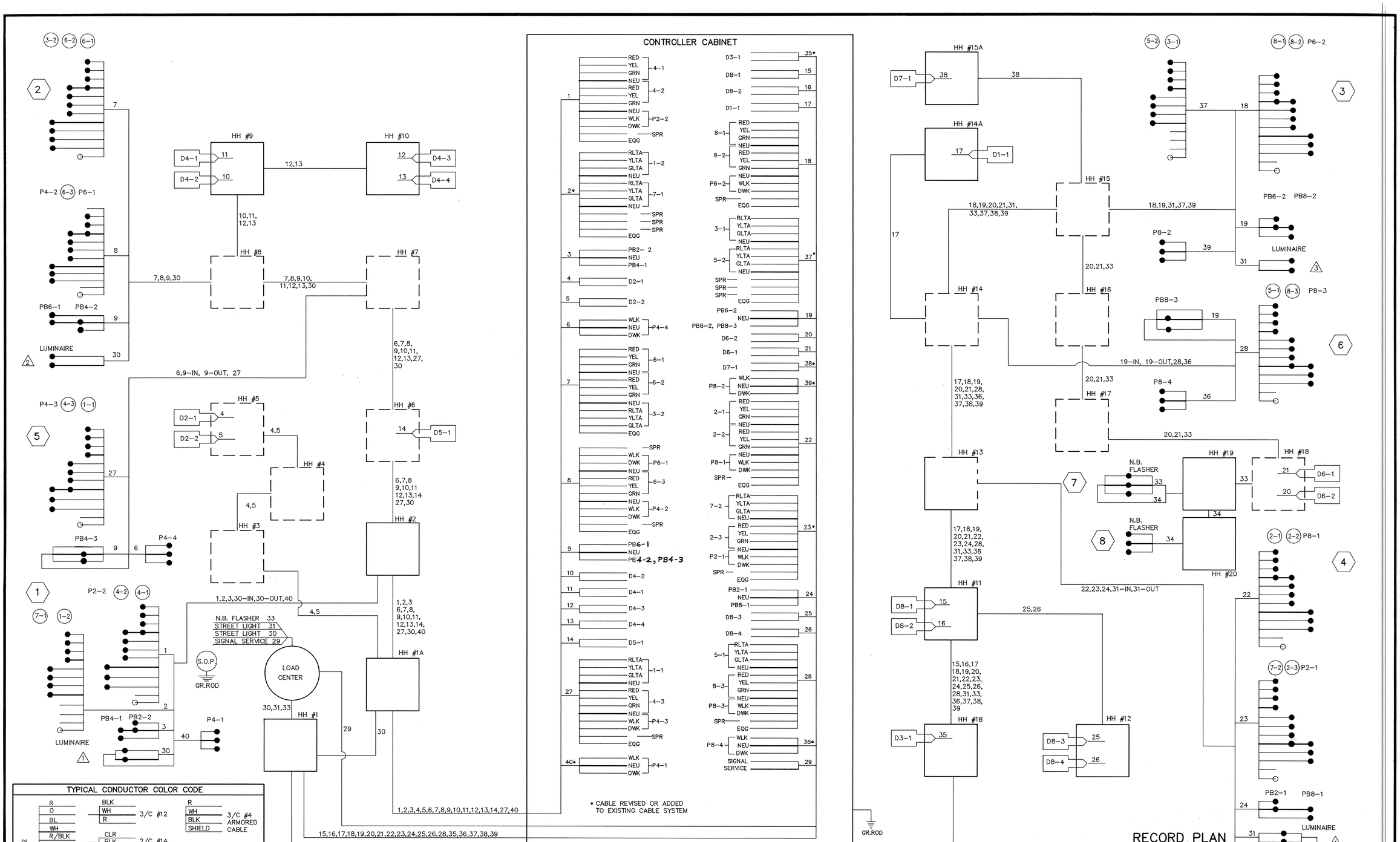
CONTROLLER CABINET
HH #9
HH #10
HH #8
HH #7
HH #5
HH #6
HH #4
HH #3
HH #2
HH #1A
HH #1
HH #15A
HH #14A
HH #15
HH #14
HH #16
HH #17
HH #13
HH #11
HH #1B
HH #12
HH #19
HH #18
HH #20
LOAD CENTER
S.O.P.
GR.ROD
N.B. FLASHER 33
STREET LIGHT 31
STREET LIGHT 30
SIGNAL SERVICE 29
LUMINAIRE
N.B. FLASHER
PB6-2 PB8-2
PB8-3
PB2-1 PB8-1
* CABLE REVISED OR ADDED TO EXISTING CABLE SYSTEM
TYPICAL CONDUCTOR COLOR CODE
12/C #12
3/C #12
2/C #14
2-1/C #6
2-1/C #10
3/C #4 ARMORED CABLE
ER099WR
NOTE: ALL TERMINAL BLOCK CONNECTIONS SHALL BE ARRANGED AS SPECIFIED.
I HEREBY CERTIFY THAT THIS PLAN, SPECIFICATION, OR REPORT WAS PREPARED BY ME OR UNDER MY DIRECT SUPERVISION AND THAT I AM A DULY REGISTERED PROFESSIONAL ENGINEER UNDER THE LAWS OF THE STATE OF MINNESOTA
DATE 1/9/92 REG. NO. 12657
CONSULTING ENGINEERS
Maier Stewart & Associates Inc.
9800 SHELARD PARKWAY (612) 546-0432 MINNEAPOLIS, MINNESOTA 55441
1959 SLOAN PLACE (612) 774-6021 ST. PAUL, MINNESOTA 55117
REVISIONS
1/9/92 MnDOT TRAFFIC ENGINEERING REVIEW COMMENTS
1/29/92 MnDOT TRAFFIC ENGINEERING REVIEW COMMENTS
3/9/92 FINAL CORRECTIONS D.HANSON/C.O.T.
DESIGNED JEJ
CHECKED JEJ
DRAWN MRJ GG
GRAPHIC SCALE
HORIZ. NONE
VERT.
RECORD PLAN
JUNE 1994
CITY OF ELK RIVER
PROPOSED TRAFFIC CONTROL SIGNAL SYSTEM
MAIN STREET AT TH 169
FIELD WIRING DIAGRAM
S.A.P. 204-113-05
DATE MAY,1991 SHEET 10 OF 17 SHEETS PROJECT NO. 230-099
DRAWING NUMBER
DRAWING NUMBER
DRAWING NUMBER
DRAWING NUMBER
MAINS.92
10

667