GENERAL NOTES

ALL INTERIOR PIPING SHALL BE FLANGED AND SUPPORTED AS NECESSARY TO HOLD THE PIPE AND APPURTENANCES IN A FIRM SUBSTANTIAL MANNER AT THE LINES AND GRADE SHOWN AND WITHOUT STRAIN UPON THE PIPING AND CONNECTED EQUIPMENT.

ONE FULL LENGTH OF BURIED FORCEMAIN SHALL HAVE RESTRAINED JOINTS. ALL FORCEMAIN FITTINGS SHALL BE RESTRAINED JOINT DUCTILE IRON FITTINGS.

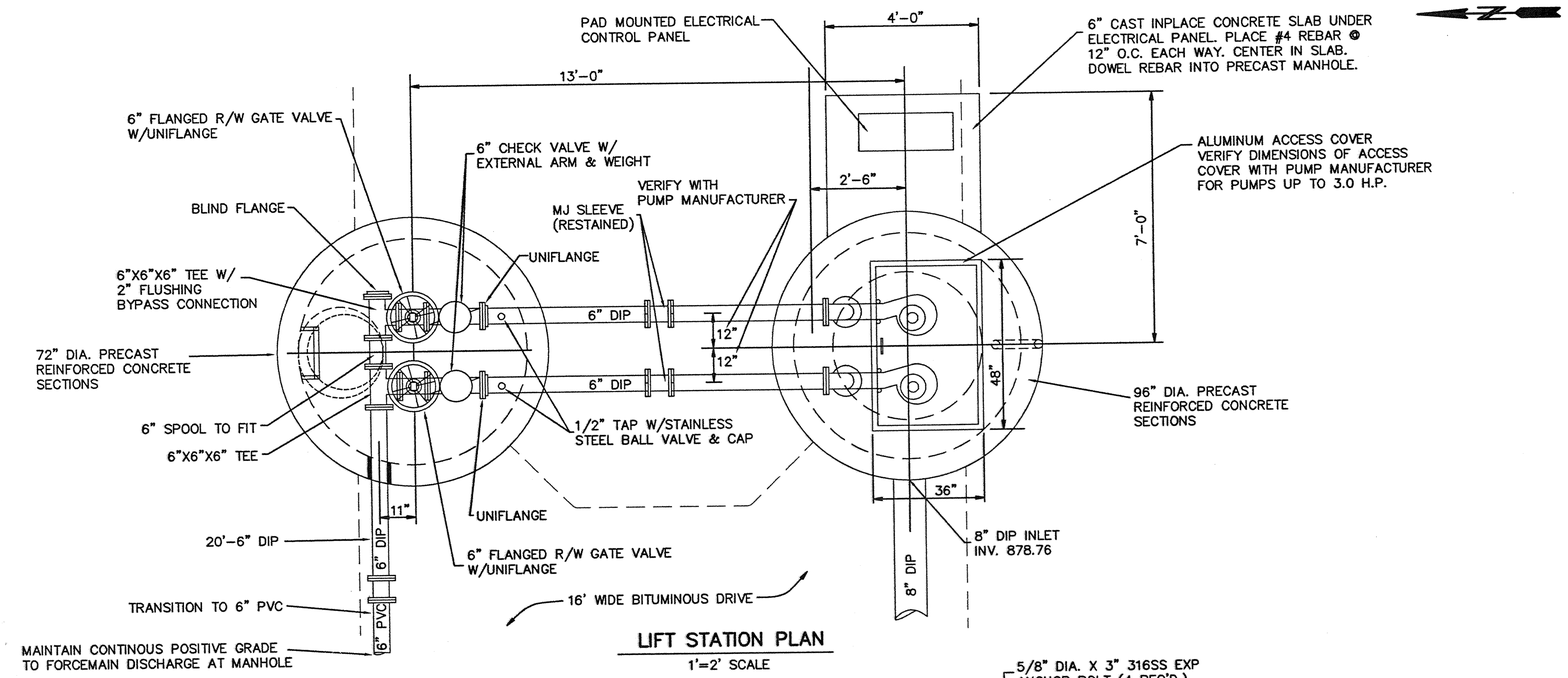

LIFT STATION PLAN

1'=2' SCALE

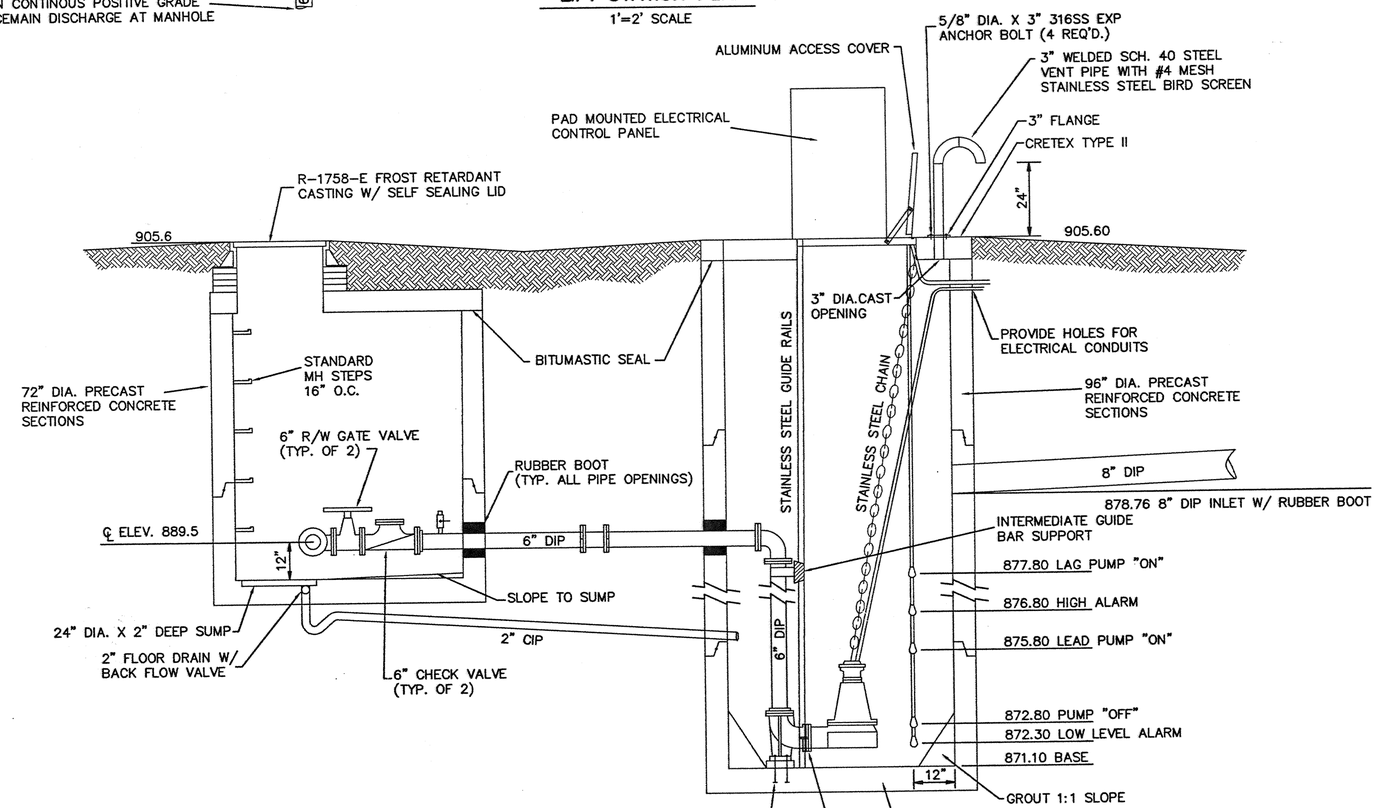

LIFT STATION SECTION

1'=2' SCALE

3. CHANGE FORCEMAIN SIZE TO 6".
3. CHANGE FORCEMAIN SIZE TO 4".
2. LIFT STATION STRUCTURE DIAMETER.
1. PER REVIEW BY KAEDING & ASSOC.

PIONEER engineering PA
LAND SURVEYORS • CIVIL ENGINEERS
LAND PLANNERS • LANDSCAPE ARCHITECTS
2422 Enterprise Drive, Mendota Heights, MN 55120, (612) 681-1914 FAX:681-9488
625 Highway 10 N.E., Blaine, MN 55434, (612) 783-1880 FAX:783-1883

I hereby certify that this plan was prepared by me or under my direct supervision and that I am a duly Licensed Professional Engineer under the laws of the State of Minnesota

Name Paul J. Cherne
Reg. No. 19860 Date 10/2/01

Revisions	
1. 10/29/01	4. 1/11/02
2. 11/6/01	
3. 1/9/02	

Date	10/2/01
Designed	PJC
Drawn	SAG

SHEET TITLE: LIFT STATION PLAN

OWNER: GOLD NUGGET, 8857 ZEALAND AVENUE NORTH, BROOKLYN PARK, MINNESOTA 55445

PROJECT: KLIEVER LAKE FIELDS PHASE 1

SHEET 16 OF 20 SHEETS

J:\dwg\20070\-ELK RIVER\dwg\20070LIFT.dwg 01/01/02 01:06:16 PM CST

DRAWING NUMBER

SAFCO PRODUCTS • NEW HOPE, MINNESOTA
REORDER BY PART NUMBER 65532
POSITION EDGE OF PRINT ON THIS LINE

KLIEVER 1 1/2
16