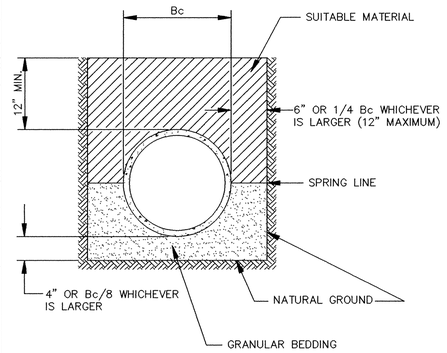

NOTE: ALL COSTS OF EXCAVATION BELOW GRADE AND PLACEMENT OF GRANULAR BEDDING SHALL BE INCLUDED IN THE BID PRICES FOR PIPE ITEMS.

CLASS B PIPE BEDDING

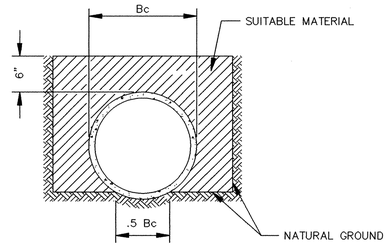

THE BOTTOM OF THE TRENCH SHALL BE SHAPED TO FIT THE PIPE BARREL FOR AT LEAST 50% OF THE OUTSIDE DIAMETER. THE REMAINDER OF THE PIPE IS SURROUNDED TO A HEIGHT OF AT LEAST 6" ABOVE ITS TOP BY SELECT FILL MATERIALS, PLACED BY HAND TOOLS AND COMPACTED TO COMPLETELY FILL ALL SPACES UNDER AND ADJACENT TO THE PIPE.

NOTE: ALL COSTS OF EXCAVATION BELOW GRADE AND PLACEMENT OF GRANULAR BEDDING SHALL BE INCLUDED IN THE BID PRICES FOR PIPE ITEMS.

CLASS C PIPE BEDDING

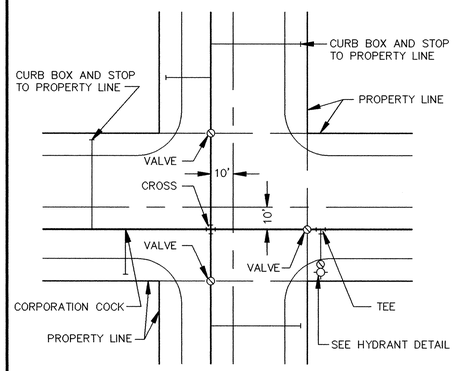

TYPICAL WATER LAYOUT

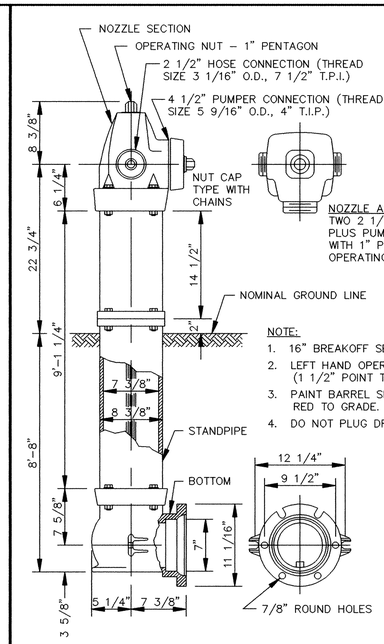

NOTE:
1. 16" BREAKOFF SECTION
2. LEFT HAND OPERATING NUT (1 1/2" POINT TO FLAT)
3. PAINT BARREL SECTION RED TO GRADE.
4. DO NOT PLUG DRAIN HOLES.

PACER HYDRANT DETAIL

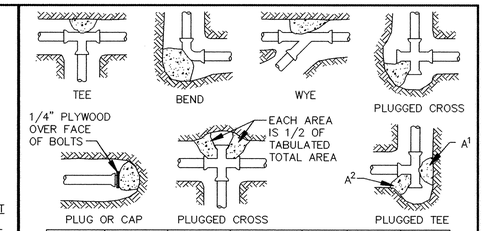

NOMINAL FITTING SIZE (INCHES)	TEE, WYE, PLUG OR CAP	90° BEND, PLUGGED CROSS	TEE PLUGGED ON RUN		45° BEND	22 1/2° BEND	11 1/4° BEND
			A^1	A^2			
4	1.0	1.4	1.9	1.4	1.0	---	---
6	2.1	3.0	4.3	3.0	1.6	1.0	---
8	3.8	5.3	7.6	5.4	2.9	1.5	1.0
10	5.9	8.4	11.8	8.4	4.6	2.6	1.2
12	8.5	12.0	17.0	12.0	6.6	3.4	1.7
14	11.5	16.3	23.0	16.3	8.9	4.6	2.3
16	15.0	21.3	30.0	21.3	11.6	6.0	3.0
18	19.0	27.0	38.0	27.0	14.6	7.6	3.8
20	23.5	33.3	47.0	33.3	18.1	9.4	4.7
24	34.0	48.0	68.0	48.0	26.2	13.6	6.8

NOTE
1. CONCRETE THRUST BLOCKING TO BE POURED AGAINST UNDISTURBED EARTH.
2. KEEP CONCRETE CLEAR OF JOINT AND ACCESSORIES.
3. IF NOT SHOWN ON PLANS, REQUIRED BEARING AREAS AT FITTING SHALL BE AS INDICATED ABOVE, ADJUSTED IF NECESSARY, TO CONFORM TO THE TEST PRESSURE(S) AND ALLOWABLE SOIL BEARING STRESS(ES).
4. BEARING AREAS AND SPECIAL BLOCKING DETAILS SHOWN ON PLANS TAKE PRECEDENCE OVER BEARING AREAS AND BLOCKING DETAILS SHOWN IN THIS STANDARD DETAIL.
5. ABOVE BEARING AREAS BASED ON TEST PRESSURE OF 150 P.S.I. AND AN ALLOWABLE SOIL BEARING STRESS OF 2000 POUNDS PER SQUARE FOOT. TO COMPUTE BEARING AREAS FOR DIFFERENT TEST PRESSURES AND SOIL BEARING STRESSES, USE THE FOLLOWING EQUATION: BEARING AREA = (TEST PRESSURE/150) X (2000/SOIL BEARING STRESS) X (TABLE VALUE).

THRUST BLOCKING DETAIL

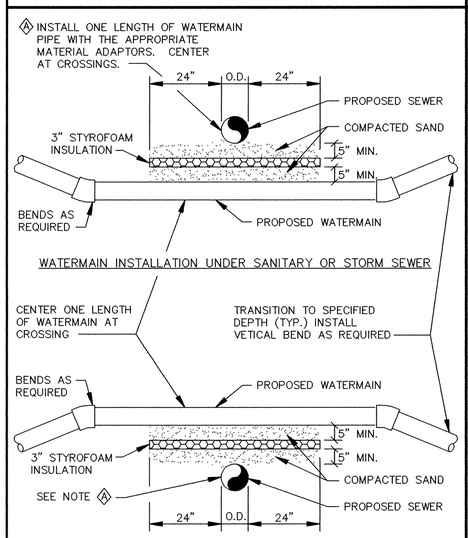

NOTES:
1. WHEN WATERMAIN AND SANITARY SEWER CROSSINGS HAVE LESS THAN 18" VERTICAL SEPARATION, INSTALL CROSSING AS SHOWN.
2. WHEN WATERMAIN COVER IS LESS THAN 7.5 FEET, INSTALL WATERMAIN UNDER SANITARY SEWER.

WATERMAIN CROSSING

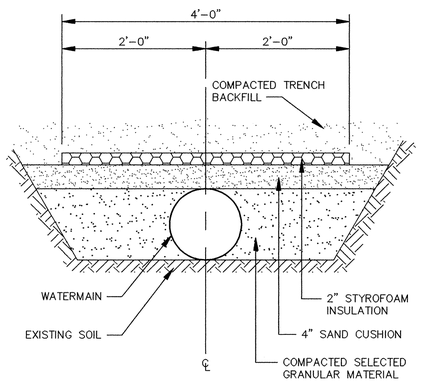

PIPE INSULATION DETAIL

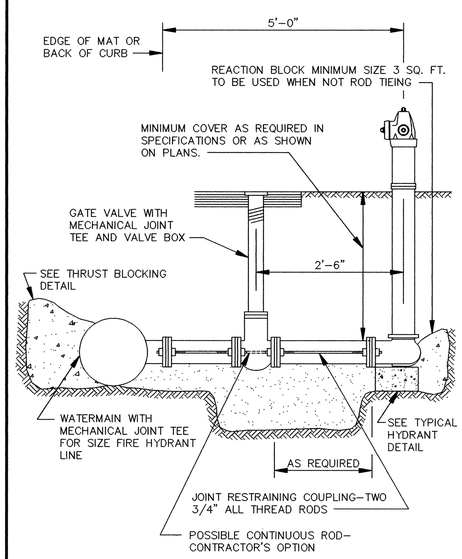

RODDING DETAIL

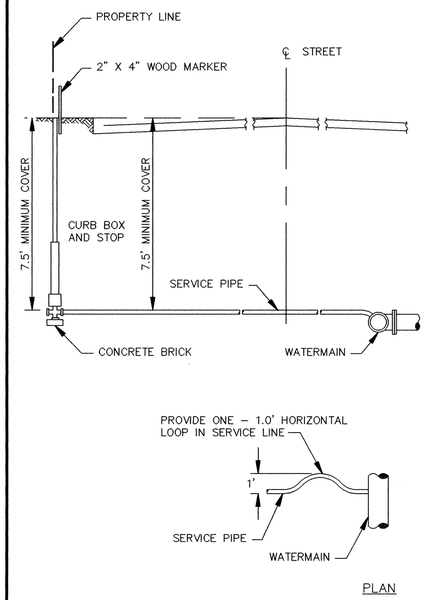

TYPICAL SERVICE DETAIL

RECORD PLAN
AUGUST 1994

ER199–D2

I HEREBY CERTIFY THAT THIS PLAN, SPECIFICATION, OR REPORT WAS PREPARED BY ME OR UNDER MY DIRECT SUPERVISION AND THAT I AM A DULY REGISTERED PROFESSIONAL ENGINEER UNDER THE LAWS OF THE STATE OF MINNESOTA.

Mark J. Graham

DATE 10/27/93 REG. NO. 19130

MSA CONSULTING ENGINEERS

1326 ENERGY PARK DRIVE
ST. PAUL, MINNESOTA 55108
(612) 644–4389

9800 SHELARD PARKWAY
MINNEAPOLIS, MINNESOTA 55441
(612) 546–0432

REVISIONS	DATE	DESCRIPTION

DESIGNED
CHECKED
DRAWN CLS
GRAPHIC SCALE
0 HORIZ.
0 VERT.

CITY OF ELK RIVER
HILLSIDE ESTATES SECOND ADDITION
WATERMAIN DETAILS

DATE OCT. 1993 | SHEET 5 OF 7 SHEETS | PROJECT NO. 230–199

DRAWING NUMBER
HILLSE2.94
5

DRAWING NUMBER

DRAWING NUMBER

DRAWING NUMBER