KAI#92326B--SHEET --

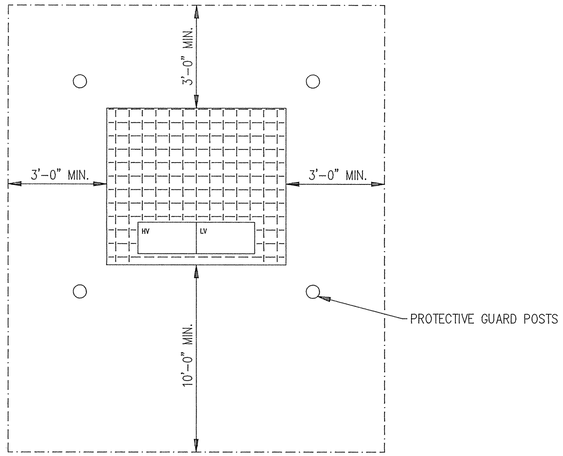

CLEARANCE REQUIREMENTS

NO SCALE

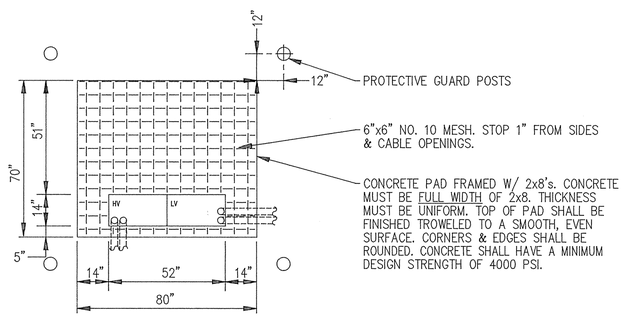

TOP VIEW

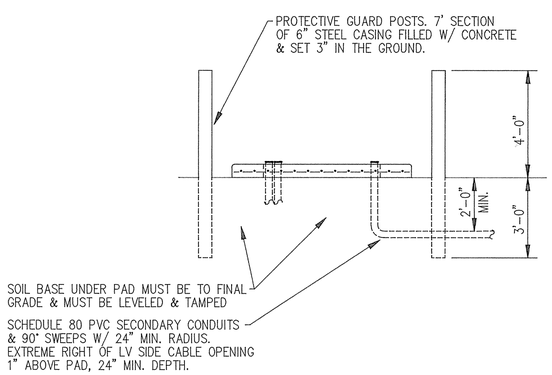

ELEVATION

TRANSFORMER PAD NOTES

1. CONFIRM DIMENSIONS PRIOR TO CONSTRUCTION
2. CONCRETE SHALL HAVE A 28-DAY STRENGTH OF 4000PSI W/ 4-6% AIR ENTRAINMENT & 3/4" (MAXIMUM) AGGREGATE SIZE
3. REINFORCING STEEL SHALL BE ASTM-A615, GRADE 60, EQUALLY SPACED AS SHOWN EACH WAY
4. MINIMUM CONCRETE COVER OVER REINFORCING STEEL SHALL BE 2", UNLESS NOTED OTHERWISE
5. FINISH TO BE A WOOD FLOAT CONCRETE FINISH W/ NO DEPRESSIONS

TRANSFORMER PAD DETAILS

NO SCALE

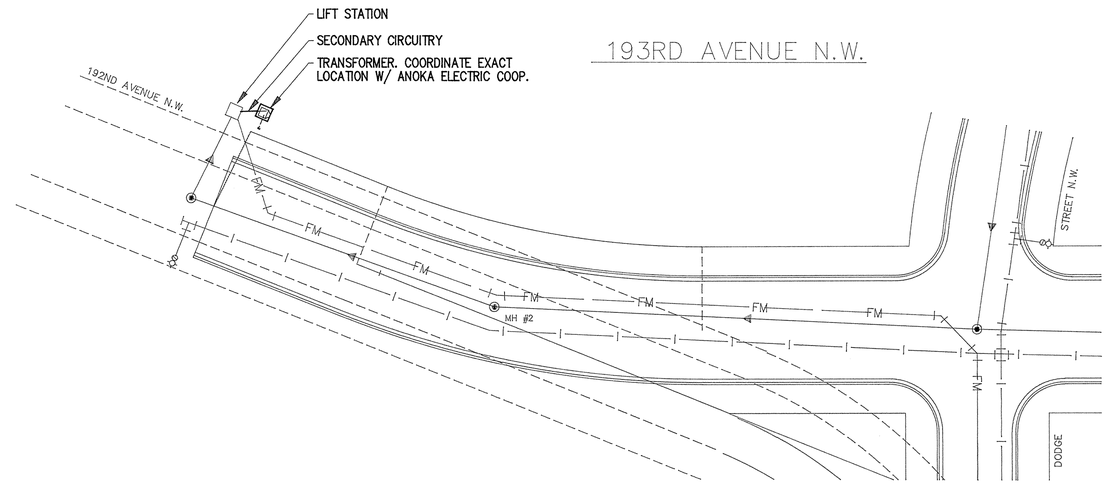

North

ELECTRICAL SITE PLAN

SCALE: 1"=30'

0 15 30 45 60 90
Graphic Scale

RECORD PLAN
JUNE, 1993

I hereby certify that this report, plan, or specification was prepared by me or under my direct supervision and I am a duly registered Professional Engineer under the laws of the state of Minnesota

Date: 04 JUNE 92 Registion No. 9955

Maier Stewart & Associates Inc.
CONSULTING ENGINEERS
1959 SLOAN PLACE [612] 774-6021 ST. PAUL, MINNESOTA 55117

REVISIONS	DATE	DESCRIPTION

DESIGNED PFK
CHECKED SJS
DRAWN TLH
GRAPHIC SCALE
0 HORIZ.
0 VERT.

CITY OF ELK RIVER
HILLSIDE ESTATES
LIFT STATION ELECTRICAL

DATE JUNE 1992 | SHEET 14 OF 19 SHEETS | PROJECT NO. 230-140

DRAWING NUMBER
HILLSE1.93
14

DRAWING NUMBER

DRAWING NUMBER

DRAWING NUMBER