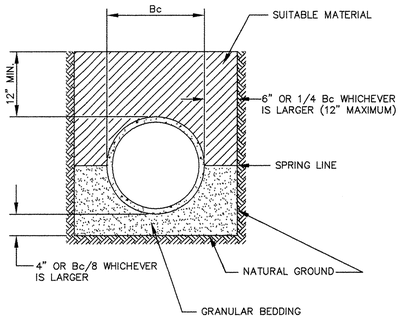

NOTE: ALL COSTS OF EXCAVATION BELOW GRADE AND PLACEMENT OF GRANULAR BEDDING SHALL BE INCLUDED IN THE BID PRICES FOR PIPE ITEMS.

CLASS B PIPE BEDDING

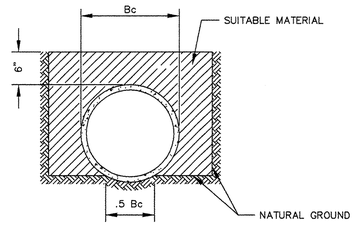

THE BOTTOM OF THE TRENCH SHALL BE SHAPED TO FIT THE PIPE BARREL FOR AT LEAST 50% OF THE OUTSIDE DIAMETER. THE REMAINDER OF THE PIPE IS SURROUNDED TO A HEIGHT OF AT LEAST 6" ABOVE ITS TOP BY SELECT FILL MATERIALS, PLACED BY HAND TOOLS AND COMPACTED TO COMPLETELY FILL ALL SPACES UNDER AND ADJACENT TO THE PIPE.

NOTE: ALL COSTS OF EXCAVATION BELOW GRADE AND PLACEMENT OF GRANULAR BEDDING SHALL BE INCLUDED IN THE BID PRICES FOR PIPE ITEMS.

CLASS C PIPE BEDDING

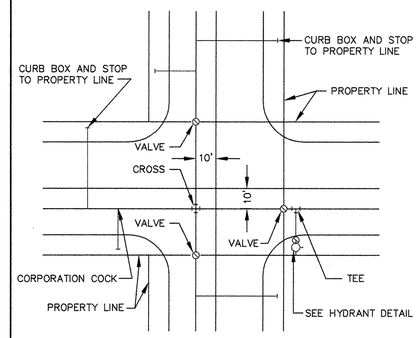

TYPICAL WATER LAYOUT

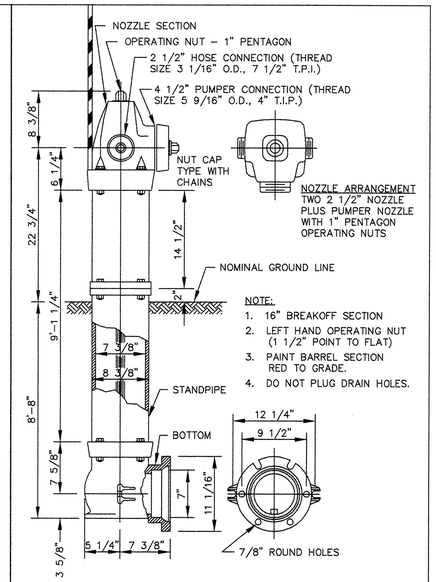

NOTE: HYDRANT LOCATING DEVICES REQUIRED – F. & I. "HYDRAFINDER" AS MANUFACTURED BY RODON CORPORATION (OR APPROVED EQUAL). LENGTH = 5FT., W/FLAT STEEL MOUNTING BRACKET AND THE "MIL SPEC" SPRING MOUNT. INCIDENTAL TO HYDRANT INSTALLATION.

PACER HYDRANT DETAIL

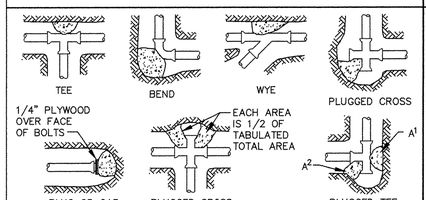

NOMINAL FITTING SIZE (INCHES)	TEE, WYE, PLUG OR CAP	90° BEND, PLUGGED CROSS	TEE PLUGGED ON RUN		45° BEND	22 1/2° BEND	11 1/4° BEND
			A1	A2			
4	1.0	1.4	1.9	1.4	1.0	---	---
6	2.1	3.0	4.3	3.0	1.6	1.0	---
8	3.8	5.3	7.6	5.4	2.9	1.5	1.0
10	5.9	8.4	11.8	8.4	4.6	2.6	1.2
12	8.5	12.0	17.0	12.0	6.6	3.4	1.7
14	11.5	16.3	23.0	16.3	8.9	4.6	2.3
16	15.0	21.3	30.0	21.3	11.6	6.0	3.0
18	19.0	27.0	38.0	27.0	14.6	7.6	3.8
20	23.5	33.3	47.0	33.3	18.1	9.4	4.7
24	34.0	48.0	68.0	48.0	26.2	13.6	6.8

NOTE

1. CONCRETE THRUST BLOCKING TO BE POURED AGAINST UNDISTURBED EARTH.
2. KEEP CONCRETE CLEAR OF JOINT AND ACCESSORIES.
3. IF NOT SHOWN ON PLANS, REQUIRED BEARING AREAS AT FITTING SHALL BE AS INDICATED ABOVE, ADJUSTED IF NECESSARY, TO CONFORM TO THE TEST PRESSURE(S) AND ALLOWABLE SOIL BEARING STRESS(ES).
4. BEARING AREAS AND SPECIAL BLOCKING DETAILS SHOWN ON PLANS TAKE PRECEDENCE OVER BEARING AREAS AND BLOCKING DETAILS SHOWN IN THIS STANDARD DETAIL.
5. ABOVE BEARING AREAS BASED ON TEST PRESSURE OF 150 P.S.I. AND AN ALLOWABLE SOIL BEARING STRESS OF 2000 POUNDS PER SQUARE FOOT. TO COMPUTE BEARING AREAS FOR DIFFERENT TEST PRESSURES AND SOIL BEARING STRESSES, USE THE FOLLOWING EQUATION: BEARING AREA = (TEST PRESSURE/150) X (2000/SOIL BEARING STRESS) X (TABLE VALUE).

THRUST BLOCKING DETAIL

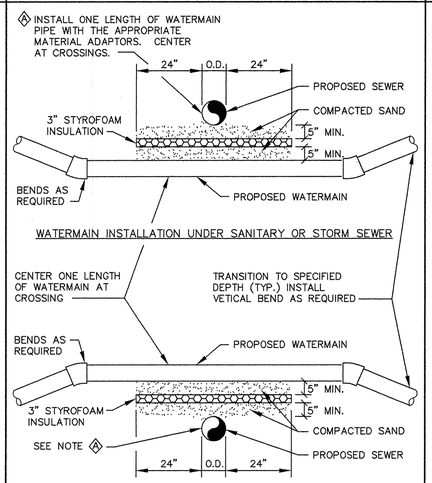

NOTES:

1. WHEN WATERMAIN AND SANITARY SEWER CROSSINGS HAVE LESS THAN 18" VERTICAL SEPARATION, INSTALL CROSSING AS SHOWN.
2. WHEN WATERMAIN COVER IS LESS THAN 7.5 FEET, INSTALL WATERMAIN UNDER SANITARY SEWER.

WATERMAIN CROSSING

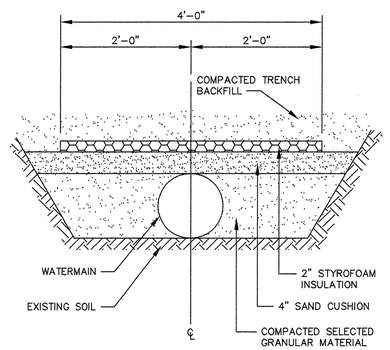

PIPE INSULATION DETAIL

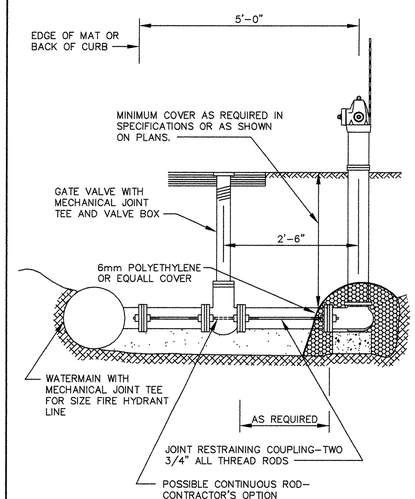

NOTE: HYDRANT LEADS SHALL BE RODDED FROM MAIN LINE TO HYDRANT UNLESS SPECIFIED OTHERWISE.

RODDING DETAIL

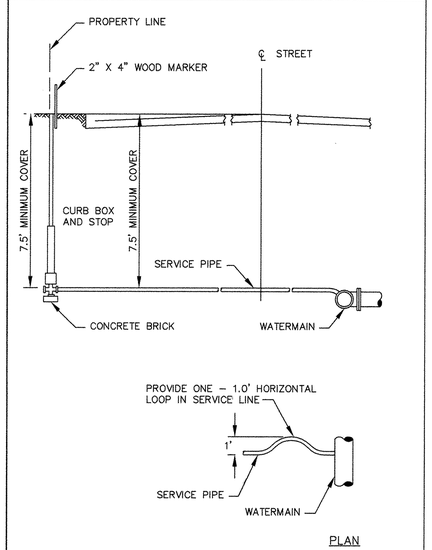

TYPICAL SERVICE DETAIL

RECORD PLAN
2006

DATE	REVISIONS	BY
04/10/07	AS-BUILT PER CITY	EY

D2

DRAWN TK
DATE 12/1/03
SCALE NA
PROJECT RG101.003
CHECKED
APPROVED

WATERMAIN DETAILS
HILLSIDE ESTATES 10TH ADDITION
CITY OF ELK RIVER, MINNESOTA

OWNER/DEVELOPER
RIVERSIDE COMPANIES
19230 EVANS STREET, SUITE 115
ELK RIVER, MINNESOTA
PHONE:763-241-1801

METRO LAND SURVEYING & ENGINEERING
12510 Fletcher Lane North, Suite 1, Hugo, MN 55074
Telephone:(763)428-3130 Fax:(763)428-5172
E-mail: Survey@metroLS.com
Little Canada: (651) 766-0112 Pine City: (320) 629-3287

DRAWING NUMBER
HILLSE10.07
9

SAFCO PRODUCTS • NEW HOPE, MINNESOTA
REORDER BY PART NUMBER 65552
PRINTING EDGE OF PAPER ON THIS LINE