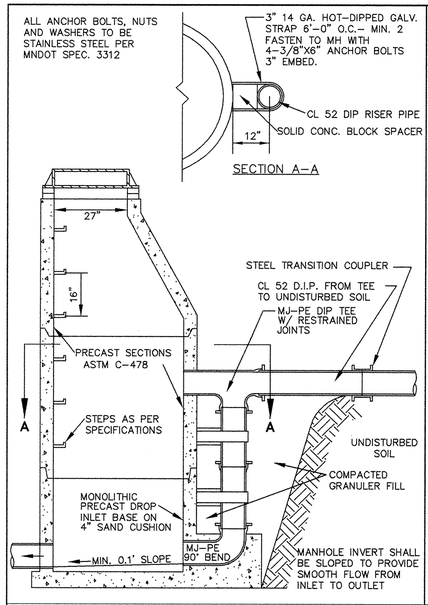

OUTSIDE DROP MANHOLE

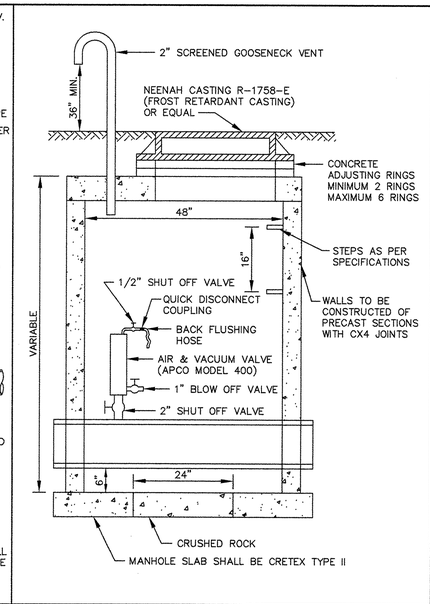

STANDARD AIR RELIEF MANHOLE

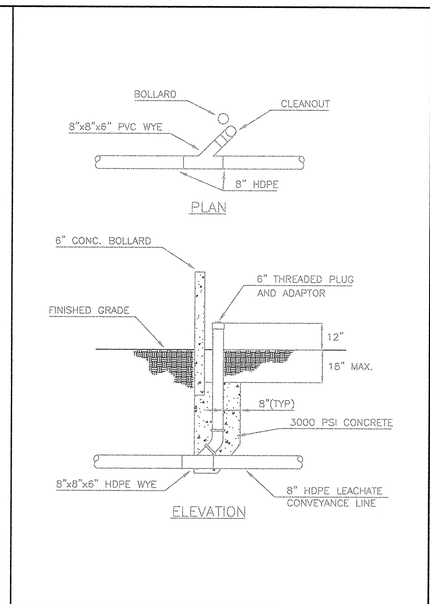

TYPE B CLEANOUT DETAIL

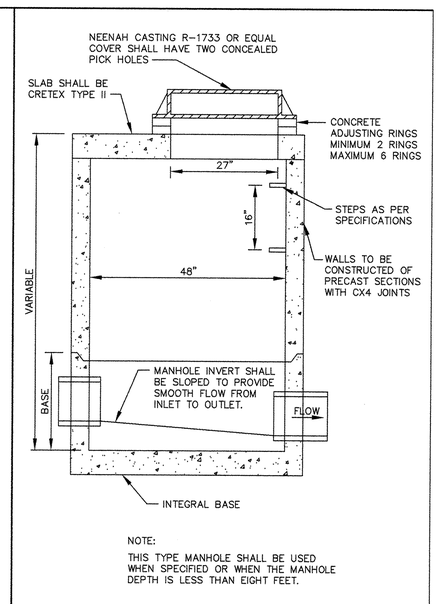

NOTE:
THIS TYPE MANHOLE SHALL BE USED WHEN SPECIFIED OR WHEN THE MANHOLE DEPTH IS LESS THAN EIGHT FEET.

SLAB TOP MANHOLE

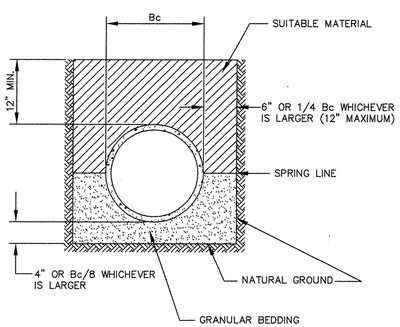

NOTE: ALL COSTS OF EXCAVATION BELOW GRADE AND PLACEMENT OF GRANULAR BEDDING SHALL BE INCLUDED IN THE BID PRICES FOR PIPE ITEMS.

CLASS B PIPE BEDDING

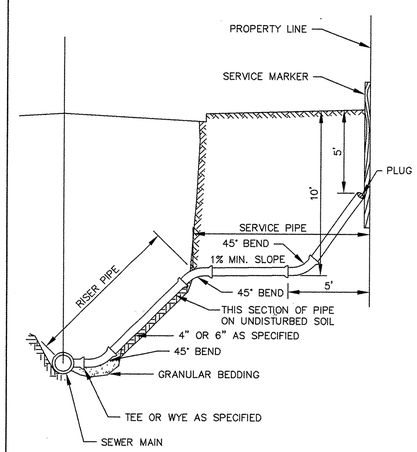

TO BE USED AS SERVICE CONNECTIONS ON DEEP LINES

SERVICE RISER SECTION

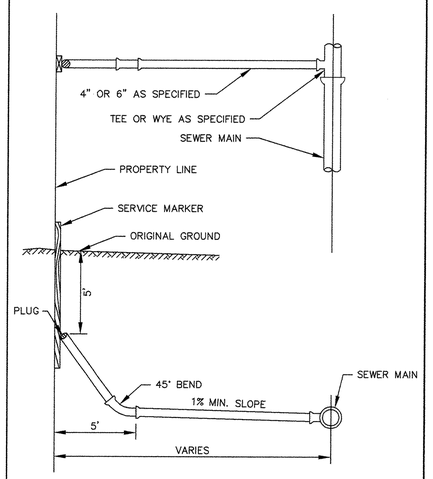

TYPICAL HOUSE SERVICE

RECORD PLAN
2006

DATE	REVISIONS	BY
04/10/07	AS-BUILT PER CITY	EY

D1

DRAWN	TK
DATE	12/1/03
SCALE	NA
PROJECT	R0101.003
CHECKED	
APPROVED	

SANITARY SEWER DETAILS
HILLSIDE ESTATES 10TH ADDITION

CITY OF ELK RIVER, MINNESOTA

OWNER/DEVELOPER
RIVERSIDE COMPANIES
19230 EVANS STREET, SUITE 115
ELK RIVER, MINNESOTA
PHONE: 763-241-1801

METRO LAND SURVEYING & ENGINEERING
12850 Fletcher Lane North-Unit B, Rogers, MN 55374
Internet: www.metrols.com Phone: (763) 428-3172
E-mail: survey@metrols.com
Little Canada: (651) 766-0112 Pine City: (320) 629-3267

DRAWING NUMBER

DRAWING NUMBER

DRAWING NUMBER
HILLSE10.07
8

SAFCO PRODUCTS • NEW HOPE, MINNESOTA
REORDER BY PART NUMBER 63302
PRINTOUT EDGE OF PRINT ON THIS LINE