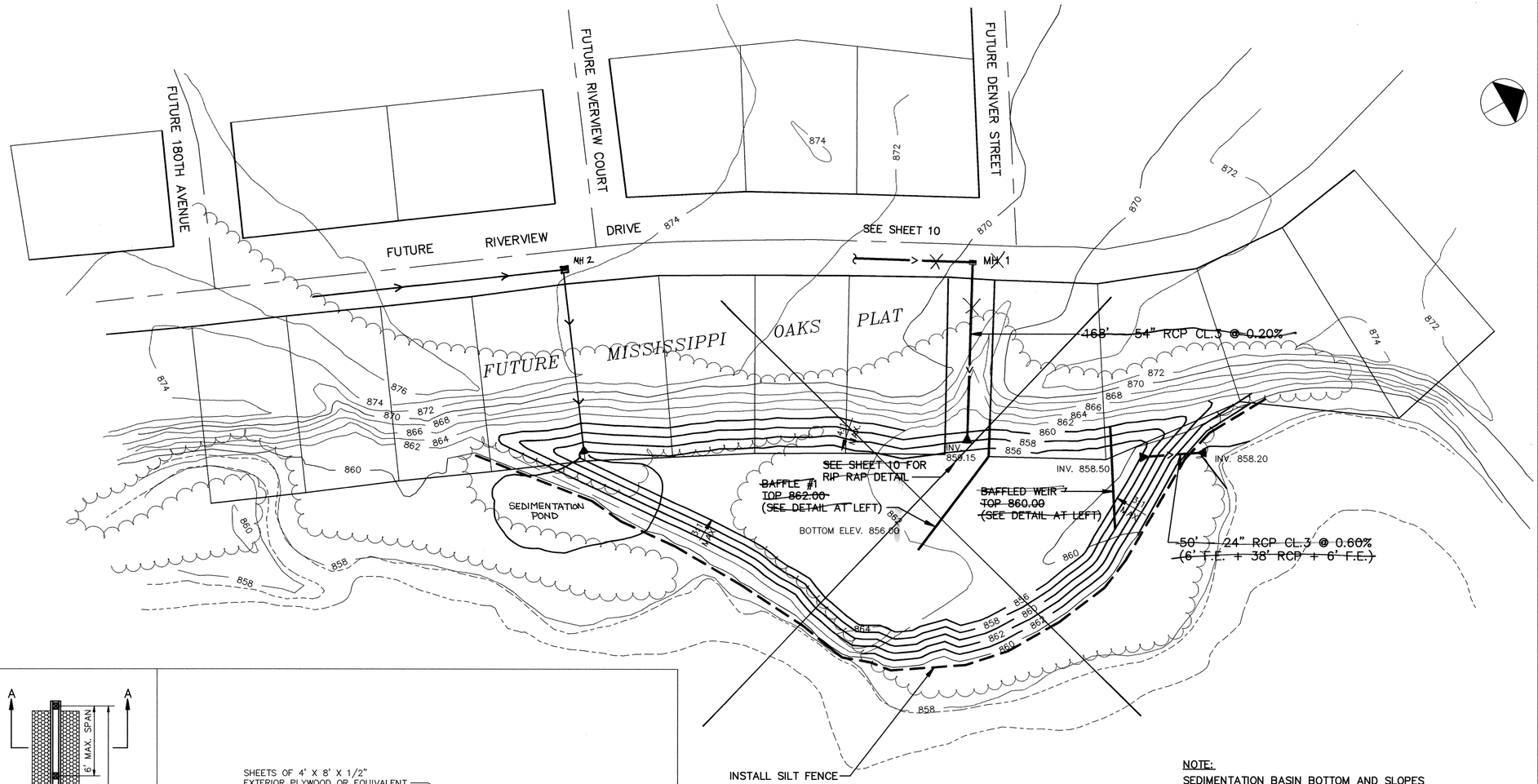

NOTE:
SEDIMENTATION BASIN BOTTOM AND SLOPES SHALL HAVE 3" MINIMUM TOPSOIL AND SEED AS PER SPECIFICATIONS

SEDIMENTATION BASIN PLAN

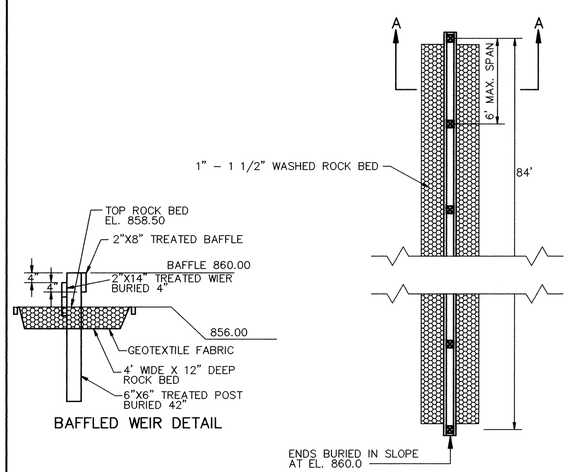

BAFFLED WEIR DETAIL

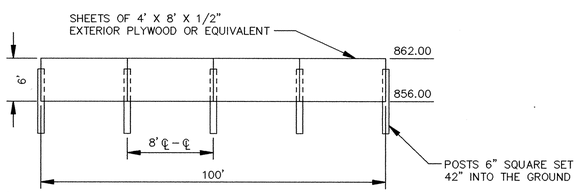

BAFFLE #1

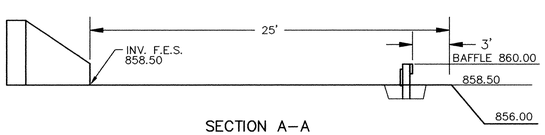

SECTION A–A

BAFFLED WEIR

APPROXIMATE
EXCAVATION VOLUME

8333 CY CUT
560 CY FILL

GRAPHIC SCALE
50 0 50 100
1" = 50'

RECORD PLAN NOV,1993

I HEREBY CERTIFY THAT THIS PLAN, SPECIFICATION, OR REPORT WAS PREPARED BY ME OR UNDER MY DIRECT SUPERVISION AND THAT I AM A DULY REGISTERED PROFESSIONAL ENGINEER UNDER THE LAWS OF THE STATE OF MINNESOTA.
Terry J. Maier
DATE 4/28/93 REG.NO. 15316

CONSULTING ENGINEERS
Maier Stewart & Associates Inc.
1959 SLOAN PLACE (612) 774–6021 ST. PAUL, MINNESOTA 55117
9800 SHELARD PARKWAY (612) 546–0432 MINNEAPOLIS, MINNESOTA 55441

REVISIONS	DATE	DESCRIPTION

DESIGNED SJM
CHECKED TJM
DRAWN CLS
GRAPHIC SCALE 0 HORIZ. 50 / 0 VERT. 5

CITY OF ELK RIVER
STORM SEWER
RIVERVIEW DRIVE

DATE APRIL 1993 | SHEET 23 OF 28 SHEETS | PROJECT NO. 230–59

ER159–SP

(2) PRODUCTS • NEW HOPE, MINNESOTA
REORDER BY PART NUMBER 62302
PRINTING DIVISION OF PAPER OR FIBER CORE
SAFCO PRODUCTS • NEW HOPE, MINNESOTA
REORDER BY PART NUMBER 62302
PRINTING DIVISION OF PAPER OR FIBER CORE
SAFCO PRODUCTS • NEW HOPE, MINNESOTA
REORDER BY PART NUMBER 62302
PRINTING DIVISION OF PAPER OR FIBER CORE
SAFCO PRODUCTS • NEW HOPE, MINNESOTA
REORDER BY PART NUMBER 62302
PRINTING DIVISION OF PAPER OR FIBER CORE

HERIT.93
23