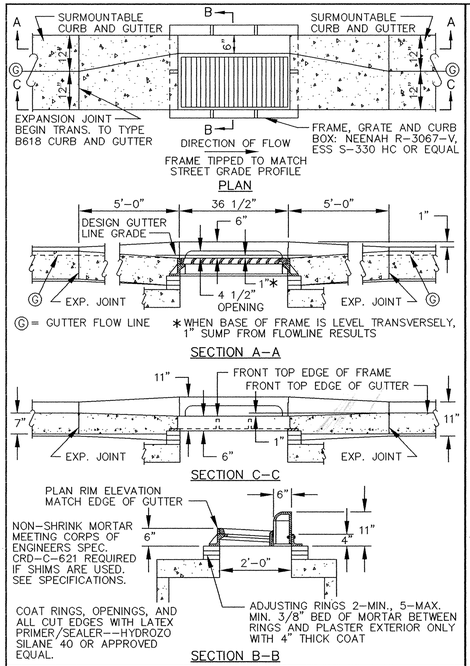

CATCH BASIN FRAME PLACEMENT
SURMOUNTABLE CURB AND GUTTER

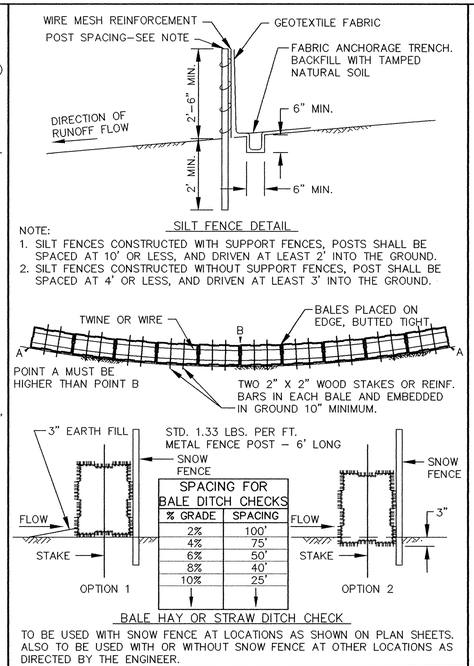

EROSION CONTROL DETAIL

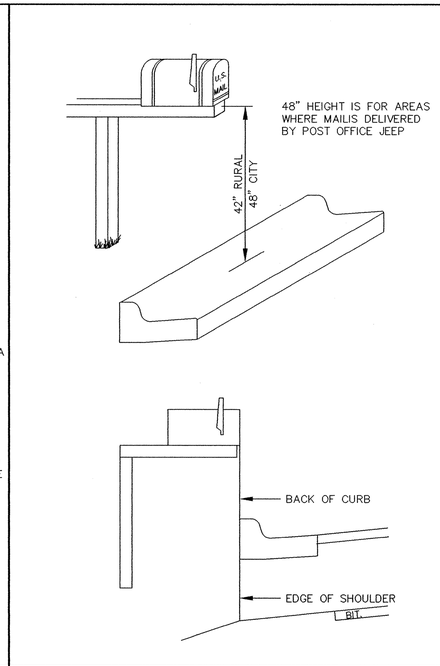

MAIL BOX

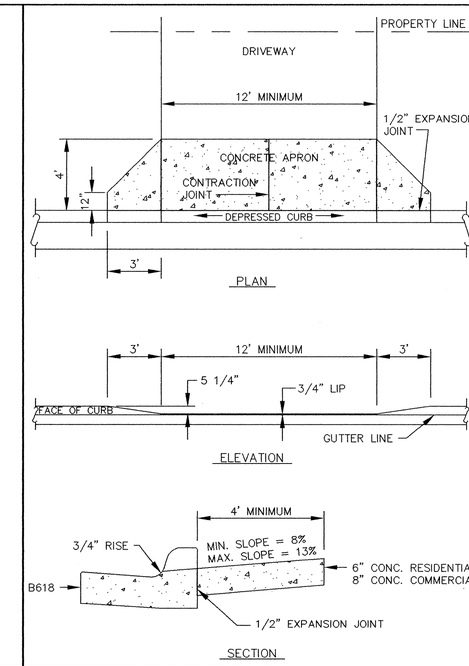

DEPRESSED CURB WITH DRIVEWAY APRON

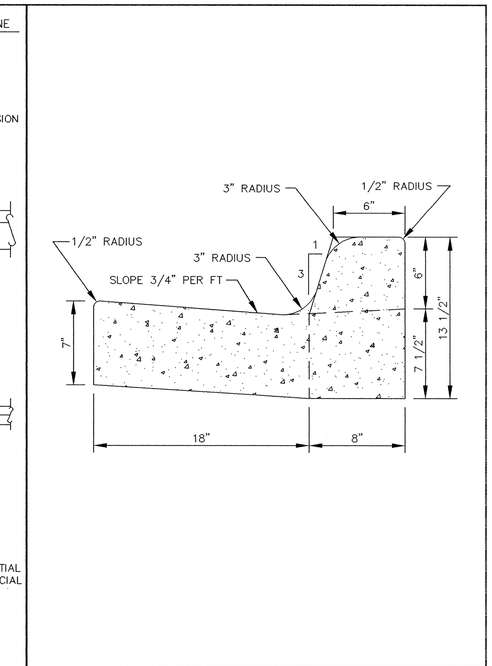

CONCRETE CURB AND GUTTER B618

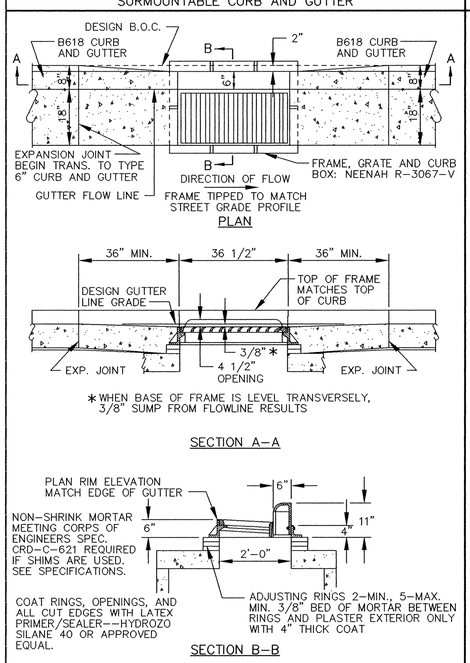

CATCH BASIN FRAME PLACEMENT
B618 CURB AND GUTTER

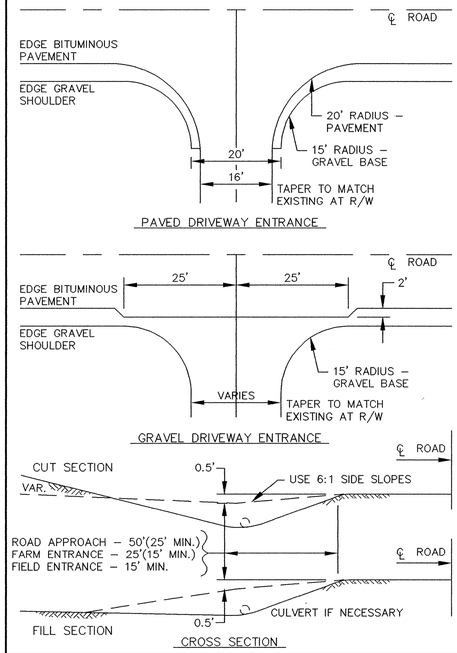

RURAL DRIVEWAY ENTRANCE

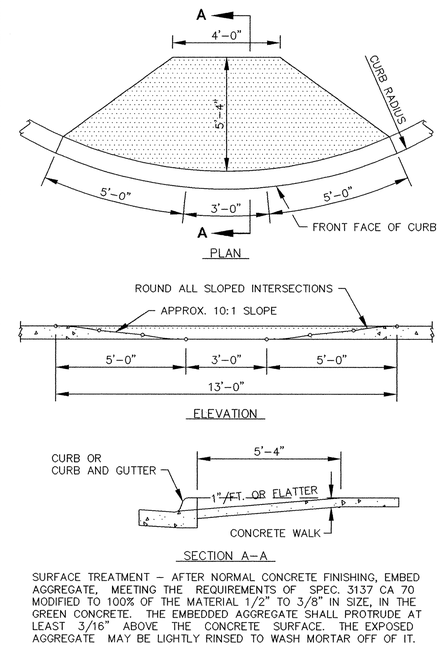

SURFACE TREATMENT - AFTER NORMAL CONCRETE FINISHING, EMBED AGGREGATE, MEETING THE REQUIREMENTS OF SPEC. 3137 CA 70 MODIFIED TO 100% OF THE MATERIAL 1/2" TO 3/8" IN SIZE, IN THE GREEN CONCRETE. THE EMBEDDED AGGREGATE SHALL PROTRUDE AT LEAST 3/16" ABOVE THE CONCRETE SURFACE. THE EXPOSED AGGREGATE MAY BE LIGHTLY RINSED TO WASH MORTAR OFF OF IT.

PEDESTRIAN CURB RAMPS

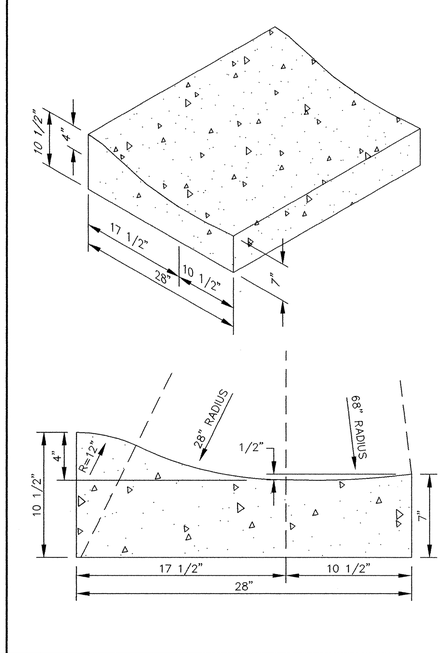

SURMOUNTABLE CONCRETE CURB AND GUTTER

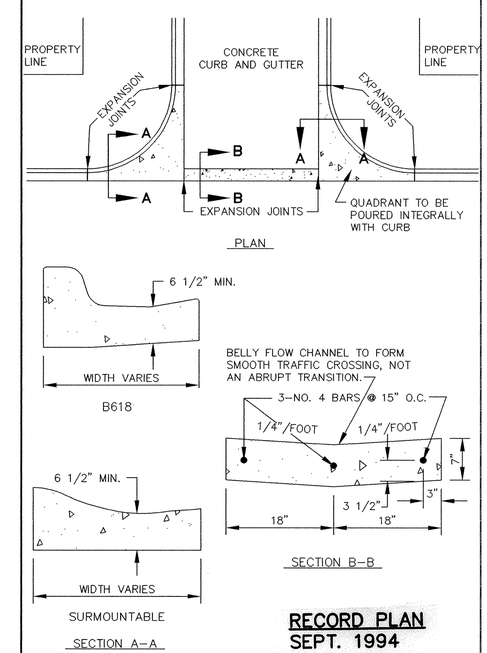

RECORD PLAN
SEPT. 1994

CONCRETE "V" GUTTER

ER215-D3

I HEREBY CERTIFY THAT THIS PLAN, SPECIFICATION, OR REPORT WAS PREPARED BY ME OR UNDER MY DIRECT SUPERVISION AND THAT I AM A DULY REGISTERED PROFESSIONAL ENGINEER UNDER THE LAWS OF THE STATE OF MINNESOTA.

Paul Boethin

DATE 3-28-94 REG.NO. 13929

MSA CONSULTING ENGINEERS

1326 ENERGY PARK DRIVE
ST. PAUL, MINNESOTA 55108
(612) 644-4389

9800 SHELARD PARKWAY
MINNEAPOLIS, MINNESOTA 55441
(612) 546-0432

REVISIONS	DATE	DESCRIPTION

DESIGNED
CHECKED
DRAWN CLS
GRAPHIC SCALE
0 HORIZ. 20
0 VERT. 5

CITY OF ELK RIVER
TRUNK SANITARY AND WATERMAIN-ELK PARK CENTER
STREET CONSTRUCTION DETAILS

DATE MARCH 1994 | SHEET 17 OF 17 SHEETS | PROJECT NO. 230-215

DRAWING NUMBER
ELKPAT.94
17

DRAWING NUMBER

DRAWING NUMBER

DRAWING NUMBER

SAFCO PRODUCTS • NEW HOPE, MINNESOTA
REORDER BY PART NUMBER 6582
PROPRIETARY DESIGN OF SAFCO PRODUCTS