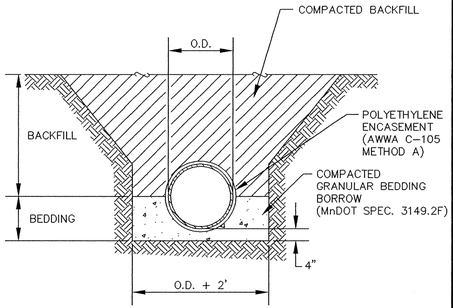

PIPE FOUNDATION AND BEDDING

ALL BACKFILL AND BEDDING OF TRENCHES SHALL BE UNIFORMLY COMPACTED TO 95% OF MAXIMUM STANDARD PROCTOR DENSITY TO TOP OF SUBGRADE. TESTS SHALL BE TAKEN AT 500' INTERVALS OR AS DIRECTED BY THE ENGINEER.

ALL EXCAVATIONS MUST COMPLY WITH THE REQUIREMENTS OF OSHA 29 CFR, PART 1926, SUBPART P, "EXCAVATION AND TRENCHES."

DUCTILE IRON PIPE BEDDING DETAIL

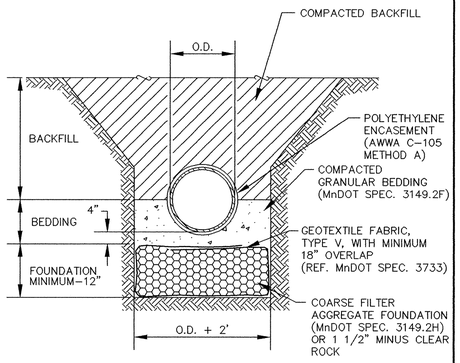

PIPE FOUNDATION AND BEDDING IN POOR SOILS

ALL BACKFILL AND BEDDING OF TRENCHES SHALL BE UNIFORMLY COMPACTED TO 95% OF MAXIMUM STANDARD PROCTOR DENSITY TO TOP OF SUBGRADE. TESTS SHALL BE TAKEN AT 500' INTERVALS OR AS DIRECTED BY THE ENGINEER.

ALL EXCAVATIONS MUST COMPLY WITH THE REQUIREMENTS OF OSHA 29 CFR, PART 1926, SUBPART P, "EXCAVATION AND TRENCHES."

DUCTILE IRON PIPE BEDDING DETAIL

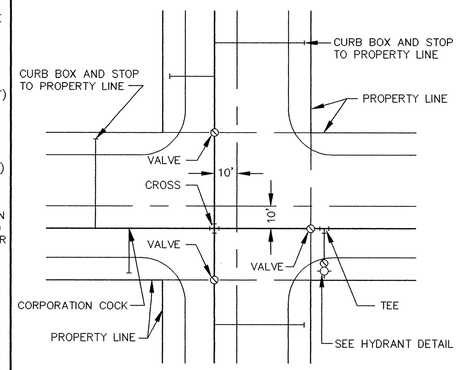

TYPICAL WATER LAYOUT

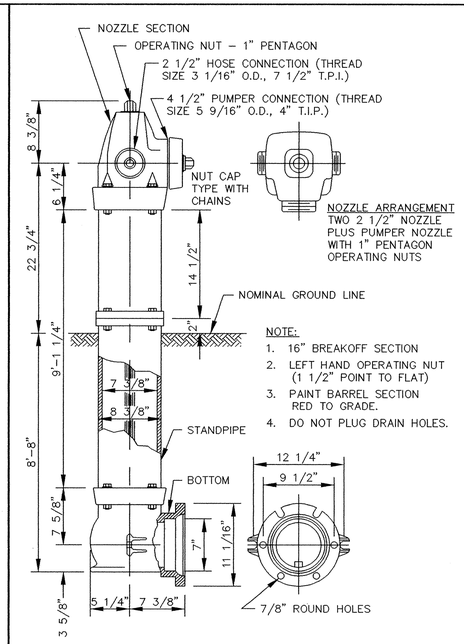

NOTE:
1. 16" BREAKOFF SECTION
2. LEFT HAND OPERATING NUT (1 1/2" POINT TO FLAT)
3. PAINT BARREL SECTION RED TO GRADE.
4. DO NOT PLUG DRAIN HOLES.

PACER HYDRANT DETAIL

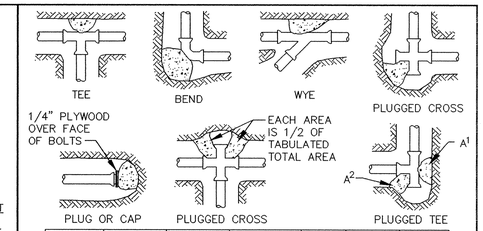

NOMINAL FITTING SIZE (INCHES)	TEE, WYE, PLUG OR CAP	90° BEND, PLUGGED CROSS	TEE PLUGGED ON RUN		45° BEND	22 1/2° BEND	11 1/4° BEND
			A^1	A^2			
4	1.0	1.4	1.9	1.4	1.0	---	---
6	2.1	3.0	4.3	3.0	1.6	1.0	---
8	3.8	5.3	7.6	5.4	2.9	1.5	1.0
10	5.9	8.4	11.8	8.4	4.6	2.6	1.2
12	8.5	12.0	17.0	12.0	6.6	3.4	1.7
14	11.5	16.3	23.0	16.3	8.9	4.6	2.3
16	15.0	21.3	30.0	21.3	11.6	6.0	3.0
18	19.0	27.0	38.0	27.0	14.6	7.6	3.8
20	23.5	33.3	47.0	33.3	18.1	9.4	4.7
24	34.0	48.0	68.0	48.0	26.2	13.6	6.8

NOTE
1. CONCRETE THRUST BLOCKING TO BE POURED AGAINST UNDISTURBED EARTH.
2. KEEP CONCRETE CLEAR OF JOINT AND ACCESSORIES.
3. IF NOT SHOWN ON PLANS, REQUIRED BEARING AREAS AT FITTING SHALL BE AS INDICATED ABOVE, ADJUSTED IF NECESSARY, TO CONFORM TO THE TEST PRESSURE(S) AND ALLOWABLE SOIL BEARING STRESS(ES).
4. BEARING AREAS AND SPECIAL BLOCKING DETAILS SHOWN ON PLANS TAKE PRECEDENCE OVER BEARING AREAS AND BLOCKING DETAILS SHOWN IN THIS STANDARD DETAIL.
5. ABOVE BEARING AREAS BASED ON TEST PRESSURE OF 150 P.S.I. AND AN ALLOWABLE SOIL BEARING STRESS OF 2000 POUNDS PER SQUARE FOOT. TO COMPUTE BEARING AREAS FOR DIFFERENT TEST PRESSURES AND SOIL BEARING STRESSES, USE THE FOLLOWING EQUATION: BEARING AREA = (TEST PRESSURE/150) X (2000/SOIL BEARING STRESS) X (TABLE VALUE).

THRUST BLOCKING DETAIL

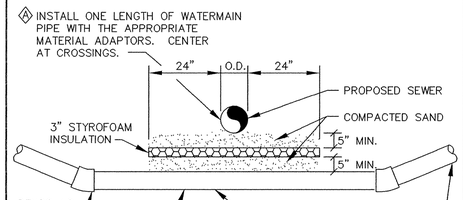

WATERMAIN INSTALLATION UNDER SANITARY OR STORM SEWER

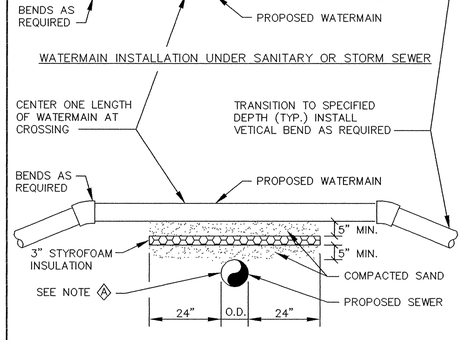

WATERMAIN INSTALLATION OVER SANITARY OR STORM SEWER

NOTES:
1. WHEN WATERMAIN AND SANITARY SEWER CROSSINGS HAVE LESS THAN 18" VERTICAL SEPARATION, INSTALL CROSSING AS SHOWN.
2. WHEN WATERMAIN COVER IS LESS THAN 7.5 FEET, INSTALL WATERMAIN UNDER SANITARY SEWER.

WATERMAIN CROSSING

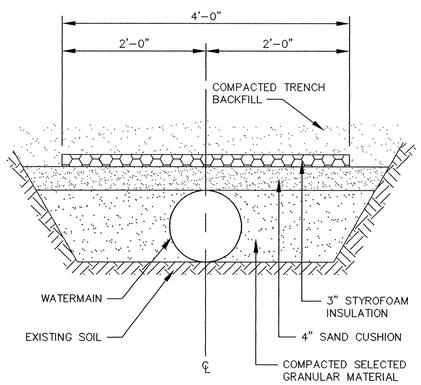

PIPE INSULATION DETAIL

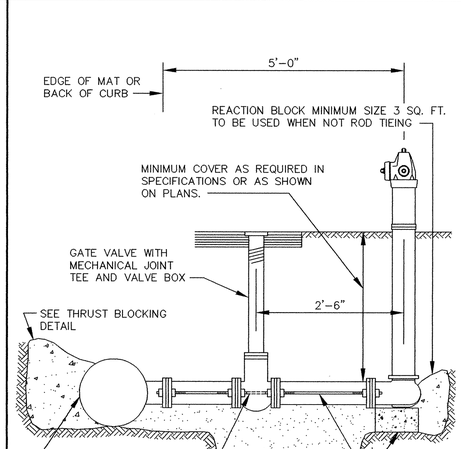

RODDING DETAIL

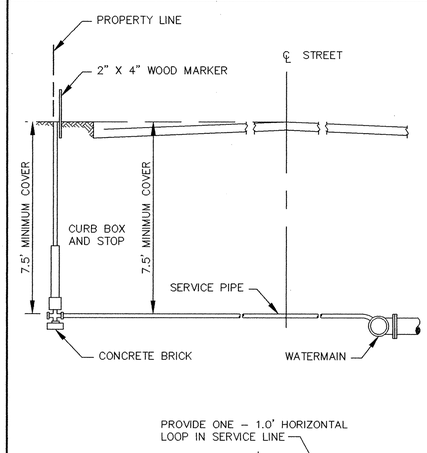

PLAN

TYPICAL SERVICE DETAIL

RECORD PLAN
SEPT. 1994

ER215–D2

I HEREBY CERTIFY THAT THIS PLAN, SPECIFICATION, OR REPORT WAS PREPARED BY ME OR UNDER MY DIRECT SUPERVISION AND THAT I AM A DULY REGISTERED PROFESSIONAL ENGINEER UNDER THE LAWS OF THE STATE OF MINNESOTA.

Paul Bartelme

DATE 3-28-94 REG.NO. 13929

MSA CONSULTING ENGINEERS

1326 ENERGY PARK DRIVE
ST. PAUL, MINNESOTA 55108
(612) 644-4389

9800 SHELARD PARKWAY
MINNEAPOLIS, MINNESOTA 55441
(612) 546-0432

REVISIONS	DATE	DESCRIPTION

DESIGNED
CHECKED PEB
DRAWN CLS
GRAPHIC SCALE
HORIZ. N/A
VERT.

CITY OF ELK RIVER
TRUNK SANITARY AND WATERMAIN–ELK PARK CENTER
WATERMAIN DETAILS

DATE MARCH 1994 | SHEET 16 OF 17 SHEETS | PROJECT NO. 230-215

DRAWING NUMBER
ELKPAT 94
16

SAFCO PRODUCTS • NEW HOPE, MINNESOTA
REORDER BY PART NUMBER 65552

Mon Mar 28 06:33:26 1994

#6846