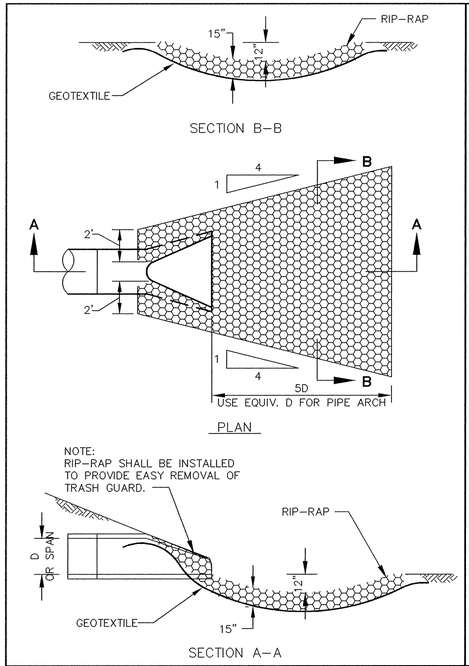

RIP-RAP INSTALLATION

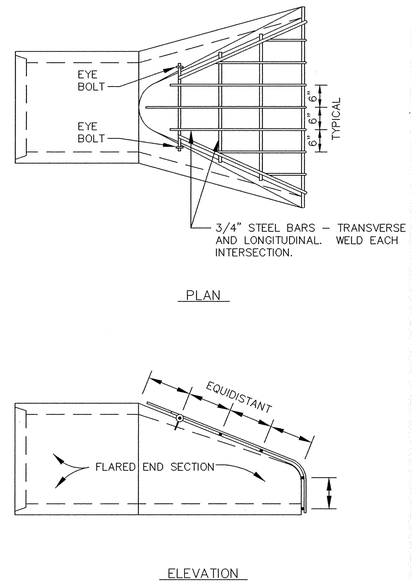

TRASH GUARD

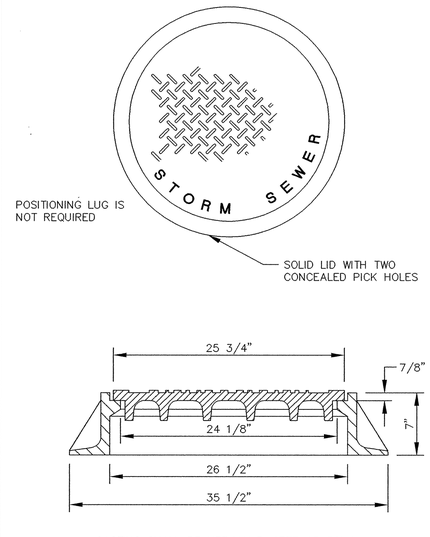

STANDARD MANHOLE CASTING

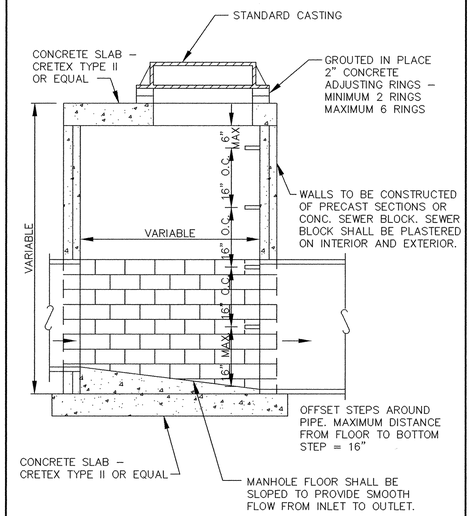

NOTE:
THIS TYPE MANHOLE SHALL BE USED WHEN SPECIFIED OR WHEN THE MANHOLE DEPTH IS LESS THAN EIGHT FEET.

SLAB TOP MANHOLE

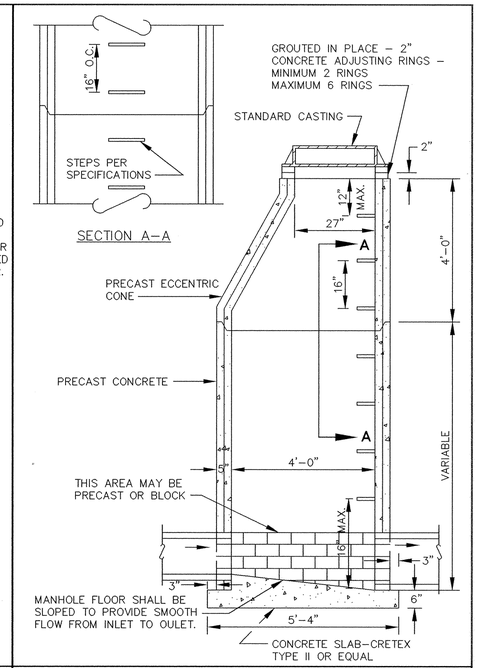

STANDARD MANHOLE

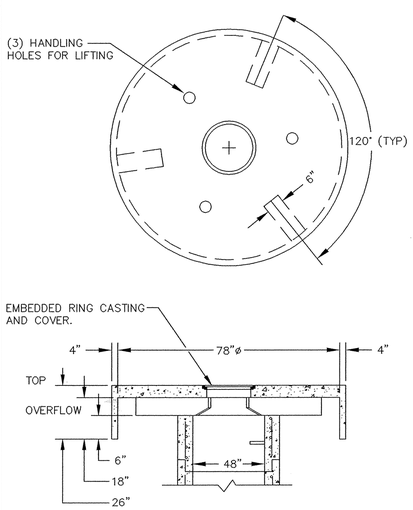

OVERFLOW STRUCTURE

PIPE SIZE	THREAD DIAMETER
12 15 18 21 24 27	5/8" ROLLED THREADS (SEE NOTE 4)
30 33 36 42 48 54 60 66	3/4" CUT OR ROLLED
72 78 84 90 96 102 108 120 132	1" CUT OR ROLLED

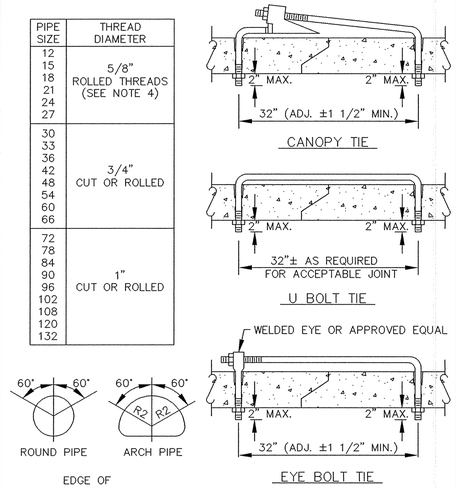

NOTE:
1. HOLES SHALL BE CAST-IN OR DRILLED 16" FROM OUTSIDE EDGE OF JOINT.
2. NUTS AND WASHERS ARE NOT REQUIRED ON INSIDE OF PIPE WITH 27" DIAMETER OR LESS.
3. TIES ARE NOT REQUIRED FOR BELL PIPE 24" AND SMALLER. ON OTHER SIZES, TIE MAY BE INSERTED FROM INSIDE.
4. CUT THREADS MAY BE USED IF WASHER AND NUT ARE USED.
5. PIPE SIZES LISTED ARE INSIDE DIAMETER OF ROUND PIPE OR EQUIVALENT DIAMETER OF PIPE ARCH.

CONCRETE PIPE JOINT TIES

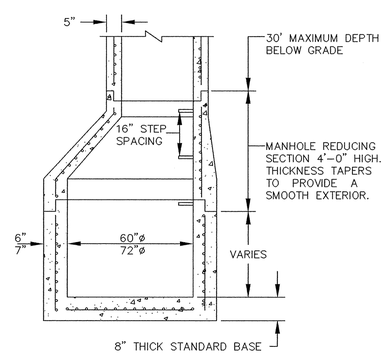

NOTE:
MANHOLE FLOOR SHALL BE SLOPED TO PROVIDE SMOOTH FLOW FROM INLET TO OUTLET.

ECCENTRIC REDUCING MANHOLES

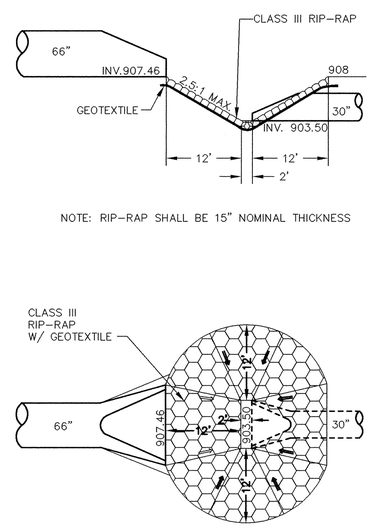

NOTE: RIP-RAP SHALL BE 15" NOMINAL THICKNESS

NOT TO SCALE

SCOUR BASIN

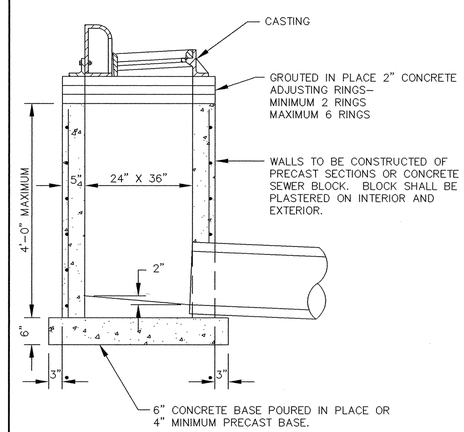

RECORD PLAN
JANUARY 1996

NOTE:
REINFORCING SHALL CONSIST OF A SINGLE LINE OF STEEL WIRE FABRIC HAVING AN AREA OF NOT LESS THAN 0.17 SQ. IN. PER FOOT OF HEIGHT.

SHALLOW CATCH BASIN

I HEREBY CERTIFY THAT THIS PLAN, SPECIFICATION, OR REPORT WAS PREPARED BY ME OR UNDER MY DIRECT SUPERVISION AND THAT I AM A DULY REGISTERED PROFESSIONAL ENGINEER UNDER THE LAWS OF THE STATE OF MINNESOTA.

DATE 5/12/94 REG.NO. 15316

MSA CONSULTING ENGINEERS

1326 ENERGY PARK DRIVE
ST. PAUL, MINNESOTA 55108
(612) 644-4389

9800 SHELARD PARKWAY
MINNEAPOLIS, MINNESOTA 55441
(612) 546-0432

REVISIONS	DATE	DESCRIPTION

DESIGNED DEN
CHECKED TB
DRAWN TPC
GRAPHIC SCALE
HORIZ. N/A
VERT. N/A

CITY OF ELK RIVER
STORM SEWER DETAILS

DATE APR,1994 | SHEET 10 OF 11 SHEETS | PROJECT NO. 230-211

ER211D1

1011

DRAWING NUMBER
SAFCO PRODUCTS • NEW HOPE, MINNESOTA
REORDER BY PART NUMBER 65032
PRECISION BANDS AT FRONT AND CROSS LINES

DRAWING NUMBER
SAFCO PRODUCTS • NEW HOPE, MINNESOTA
REORDER BY PART NUMBER 65032
PRECISION BANDS AT FRONT AND CROSS LINES

DRAWING NUMBER
SAFCO PRODUCTS • NEW HOPE, MINNESOTA
REORDER BY PART NUMBER 65032
PRECISION BANDS AT FRONT AND CROSS LINES

DRAWING NUMBER
5STRE.95
10
SAFCO PRODUCTS • NEW HOPE, MINNESOTA
REORDER BY PART NUMBER 65032
PRECISION BANDS AT FRONT AND CROSS LINES

Thu May 12 10:05:55 1994