NOTES:

1. ALL ITEMS OF THIS SIGNAL SYSTEM ARE INPLACE AND SHALL BE USED INPLACE UNLESS OTHERWISE NOTED WITH BOLD TEXT AND SYMBOLS. (BOLD TEXT AND SYMBOLS = WORK TO BE DONE ON THIS SHEET ONLY)
2. EACH SIGNAL FACE SHALL HAVE A BACKGROUND SHIELD.
3. SEVERAL EXISTING SIGNAL FACES SHALL BE SALVAGED, WITH NEW FACES HAVING LEFT TURN ARROWS BEING INSTALLED AT THE SAME LOCATIONS. THIS APPLIES TO SIGNAL HEADS 3–1, 3–2, 7–1 AND 7–2.
4. SEVERAL EXISTING LOOP DETECTORS SHALL BE RE–USED FOR DETECTION ON NEW SIGNAL PHASES. THIS APPLIES TO DETECTORS D3–1, D3–2, D7–1, D7–2, D7–3, AND D7–4.
5. COMPARE AS–BUILTS OF EXISTING SIGNAL SYSTEM AND FIELD OPERATION OF EXISTING SIGNAL TO THESE PLANS TO VERIFY CHANGES IN FUNCTION OF EXISTING EQUIPMENT.
6. ALL EXISTING SIGNAL CABLE SHALL BE REUSED.

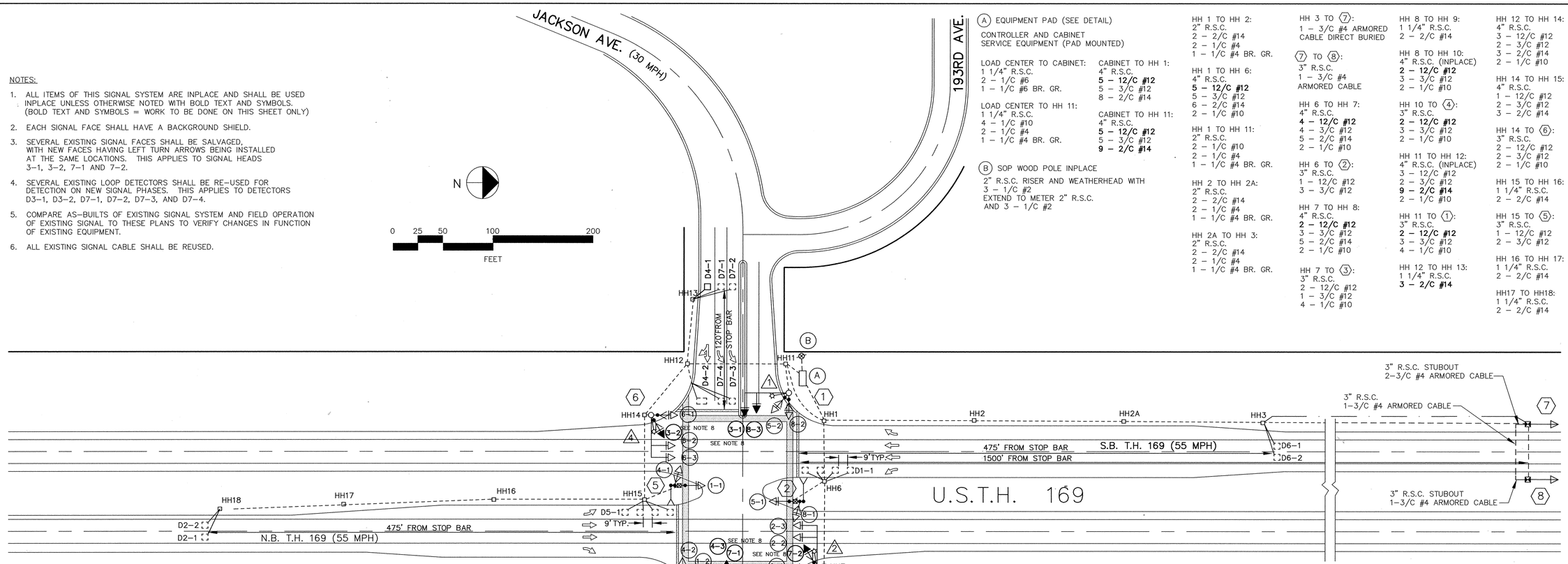

(A) EQUIPMENT PAD (SEE DETAIL)

CONTROLLER AND CABINET SERVICE EQUIPMENT (PAD MOUNTED)

LOAD CENTER TO CABINET:
1 1/4" R.S.C.
2 – 1/C #6
1 – 1/C #6 BR. GR.

LOAD CENTER TO HH 11:
1 1/4" R.S.C.
4 – 1/C #10
2 – 1/C #4
1 – 1/C #4 BR. GR.

CABINET TO HH 1:
4" R.S.C
5 – 12/C #12
5 – 3/C #12
8 – 2/C #14

CABINET TO HH 11:
4" R.S.C.
5 – 12/C #12
5 – 3/C #12
9 – 2/C #14

(B) SOP WOOD POLE INPLACE

2" R.S.C. RISER AND WEATHERHEAD WITH 3 – 1/C #2
EXTEND TO METER 2" R.S.C. AND 3 – 1/C #2

HH 1 TO HH 2:
2" R.S.C.
2 – 2/C #14
2 – 1/C #4
1 – 1/C #4 BR. GR.

HH 1 TO HH 6:
4" R.S.C.
5 – 12/C #12
5 – 3/C #12
6 – 2/C #14
2 – 1/C #10

HH 1 TO HH 11:
2" R.S.C.
2 – 1/C #10
2 – 1/C #4
1 – 1/C #4 BR. GR.

HH 2 TO HH 2A:
2" R.S.C.
2 – 2/C #14
2 – 1/C #4
1 – 1/C #4 BR. GR.

HH 2A TO HH 3:
2" R.S.C.
2 – 2/C #14
2 – 1/C #4
1 – 1/C #4 BR. GR.

HH 3 TO (7):
1 – 3/C #4 ARMORED CABLE DIRECT BURIED

(7) TO (8):
3" R.S.C.
1 – 3/C #4
ARMORED CABLE

HH 6 TO HH 7:
4" R.S.C.
4 – 12/C #12
4 – 3/C #12
5 – 2/C #14
2 – 1/C #10

HH 6 TO (2):
3" R.S.C.
1 – 12/C #12
3 – 3/C #12

HH 7 TO HH 8:
4" R.S.C.
2 – 12/C #12
3 – 3/C #12
5 – 2/C #14
2 – 1/C #10

HH 7 TO (3):
3" R.S.C.
2 – 12/C #12
1 – 3/C #12
4 – 1/C #10

HH 8 TO HH 9:
1 1/4" R.S.C.
2 – 2/C #14

HH 8 TO HH 10:
4" R.S.C. (INPLACE)
2 – 12/C #12
3 – 3/C #12
2 – 1/C #10

HH 10 TO (4):
3" R.S.C.
2 – 12/C #12
3 – 3/C #12
2 – 1/C #10

HH 11 TO HH 12:
4" R.S.C. (INPLACE)
3 – 12/C #12
2 – 3/C #12
9 – 2/C #14
2 – 1/C #10

HH 11 TO (1):
3" R.S.C.
2 – 12/C #12
3 – 3/C #12
4 – 1/C #10

HH 12 TO HH 13:
1 1/4" R.S.C.
3 – 2/C #14

HH 12 TO HH 14:
4" R.S.C.
3 – 12/C #12
2 – 3/C #12
3 – 2/C #14
2 – 1/C #10

HH 14 TO HH 15:
4" R.S.C.
1 – 12/C #12
2 – 3/C #12
3 – 2/C #14

HH 14 TO (6):
3" R.S.C.
2 – 12/C #12
2 – 3/C #12
2 – 1/C #10

HH 15 TO HH 16:
1 1/4" R.S.C.
2 – 2/C #14

HH 15 TO (5):
3" R.S.C.
1 – 12/C #12
2 – 3/C #12

HH 16 TO HH 17:
1 1/4" R.S.C.
2 – 2/C #14

HH17 TO HH18:
1 1/4" R.S.C.
2 – 2/C #14

NORMAL OPERATION IS 8 PHASE WITH: PROTECTED LEFT TURNS ON PHASES 1 & 5 (TH 169 LEFT TURNS) AND PHASES 3 AND 7 (193RD/JACKSON LEFT TURNS), AND PHASES 2 & 6 (TH 169 THROUGH AND RIGHT TURN) ON VEHICLE RECALL.

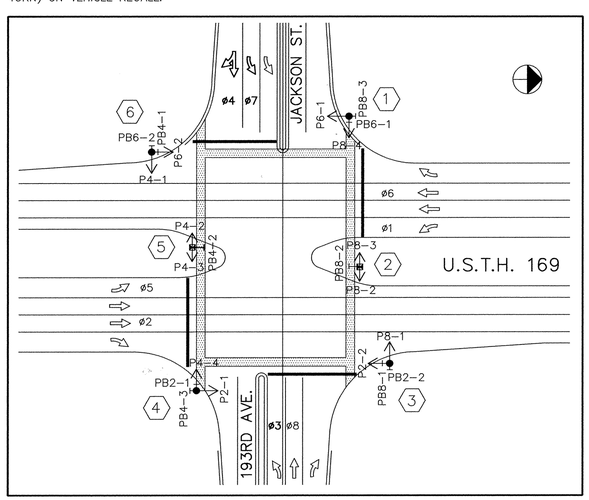

CONTROLLER PHASING, PEDESTRIAN INDICATIONS & PUSH BUTTON LAYOUT

ER306–10

DETECTOR CHART

LOOP DETECTORS				DIST. FROM STOP BAR
DESIG–NATION	PHASE (ø)	SIZE (FT.)	FUNCTION	
D1–1	1	MULTIPLE	1	5'
D2–1	2	6'X6'	1	475'
D2–2	2	6'X6'	1	475'
D3–1(a)	**3**	6'X6'	1	120'
D3–2(b)	**3**	6'X6'	1	5'
D4–1	**4**	**6'X6'**	**1**	**120'**
D4–2(c)	4	10'X6'	**1**	5'
D5–1	5	MULTIPLE	1	5'
D6–1	6	6'X6'	1	475'
D6–2	6	6'X6'	1	475'
D7–1(d)	**7**	6'X6'	1	120'
D7–2(e)	**7**	6'X6'	1	120'
D7–3(f)	**7**	6'X6'	1	5'
D7–4(g)	**7**	6'X6'	1	5'
D8–1	8	6'X6'	1	120'
D8–2(h)	8	6'X6'	1	5'
D8–3(i)	8	10'X6'	2	5'

1) CALL AND EXTEND
2) DELAY CALL – IMMEDIATE EXTEND

(a) FORMERLY D8–2
(b) FORMERLY D8–3
(c) FORMERLY D4–5
(d) FORMERLY D4–1
(e) FORMERLY D4–2
(f) FORMERLY D4–3
(g) FORMERLY D4–4
(h) FORMERLY D8–4
(i) FORMERLY D8–5

SIGNAL INDICATION CHART

POLE NO.	SIGNAL FACE	PHASE (ø)	FLASH	INDICATION			SIZE (INCHES)			BACKGROUND SHIELD
				R	Y	G	R	Y	G	
5	1–1	1	R	–	–	–	12	12	12	X
4	1–2	1	R	–	–	–	12	12	12	X
3	2–1	2	R	12	12	12	–	–	–	X
3	2–2	2	R	12	12	12	–	–	–	X
3	2–3	2	R	12	12	12	–	–	–	X
1	**3–1**	**3**	**R**	**–**	**–**	**–**	**12**	**12**	**12**	**X**
6	**3–2**	**3**	**R**	**–**	**–**	**–**	**12**	**12**	**12**	**X**
5	4–1	4	R	12	12	12	–	–	–	X
4	4–2	4	R	12	12	12	–	–	–	X
4	**4–3**	**4**	**R**	**12**	**12**	**12**	**–**	**–**	**–**	**X**
2	5–1	5	R	–	–	–	12	12	12	X
1	5–2	5	R	–	–	–	12	12	12	X
6	6–1	6	R	12	12	12	–	–	–	X
6	6–2	6	R	12	12	12	–	–	–	X
6	6–3	6	R	12	12	12	–	–	–	X
4	**7–1**	**7**	**R**	**–**	**–**	**–**	**12**	**12**	**12**	**X**
3	**7–2**	**7**	**R**	**–**	**–**	**–**	**12**	**12**	**12**	**X**
2	8–1	8	R	12	12	12	–	–	–	X
1	8–2	8	R	12	12	12	–	–	–	X
1	**8–3**	**8**	**R**	**12**	**12**	**12**	**–**	**–**	**–**	**X**
6	8–4	8	R	12	12	12	–	–	–	X

(1)	TYPE P–100–A–40–D40–9, P–100 POLE FOUNDATION **1–ONE WAY SIGNAL (OVERHEAD) END MOUNTED** **1–ONE WAY SIGNAL (OVERHEAD) MID–MAST ARM MOUNTED 12' FROM END** 1–ONE WAY SIGNAL (TYPE 10B–POLE MOUNTED AT 0') 1–ONE WAY SIGNAL (TYPE 10B–POLE MOUNTED AT 270') LUMINAIRE 250 WATT HPS (APPROX. 350') W/P.E.C. AND CH.SW 2–PEDESTRIAN PUSH BUTTONS W/2–PEDESTRIAN INSTRUCTION SIGNS (R10–4C)
(2)	PEDESTAL FOUNDATION, 12' SIGNAL PEDESTAL AND BASE 1–TWO WAY SIGNAL (TYPE 2D–PEDESTAL MOUNTED) 1–PEDESTRIAN PUSH BUTTON W/1–PEDESTRIAN INSTRUCTION SIGN (R10–4C)
(3)	TYPE P–100–A–40–D40–9, P–100 POLE FOUNDATION 1–ONE WAY SIGNAL (OVERHEAD) END MOUNTED 1–ONE WAY SIGNAL (OVERHEAD) MID–MAST ARM MOUNTED 12' FROM END **1–ONE WAY SIGNAL (TYPE 10B–POLE MOUNTED AT 0')** 1–ONE WAY SIGNAL (TYPE 10B–POLE MOUNTED AT 270') LUMINAIRE 250 WATT HPS (APPROX. 350') W/P.E.C. AND CH.SW 2–PEDESTRIAN PUSH BUTTONS W/2–PEDESTRIAN INSTRUCTION SIGNS (R10–4C)
(4)	TYPE P–100–A–40–D40–9, P–100 POLE FOUNDATION **1–ONE WAY SIGNAL (OVERHEAD) END MOUNTED** **1–ONE WAY SIGNAL (OVERHEAD) MID–MAST ARM MOUNTED 18' FROM END** 1–ONE WAY SIGNAL (TYPE 10B–POLE MOUNTED AT 0') 1–ONE WAY SIGNAL (TYPE 10B–POLE MOUNTED AT 270') LUMINAIRE 250 WATT HPS (APPROX. 350') W/P.E.C. AND CH.SW 2–PEDESTRIAN PUSH BUTTONS W/2–PEDESTRIAN INSTRUCTION SIGNS (R10–4C)
(5)	PEDESTAL FOUNDATION, 12' SIGNAL PEDESTAL AND BASE 1–TWO WAY SIGNAL (TYPE 2D–PEDESTAL MOUNTED) 1–PEDESTRIAN PUSH BUTTON W/1–PEDESTRIAN INSTRUCTION SIGN (R10–4C)
(6)	TYPE P–100–A–40–D40–9, P–100 POLE FOUNDATION 1–ONE WAY SIGNAL (OVERHEAD) END MOUNTED 1–ONE WAY SIGNAL (OVERHEAD) MID–MAST ARM MOUNTED 12' FROM END **1–ONE WAY SIGNAL (TYPE 10B–POLE MOUNTED AT 0')** 1–ONE WAY SIGNAL (TYPE 10B–POLE MOUNTED AT 270') LUMINAIRE 250 WATT HPS (APPROX. 350') W/P.E.C. AND CH.SW 2–PEDESTRIAN PUSH BUTTONS W/2–PEDESTRIAN INSTRUCTION SIGNS (R10–4C)
(7)	PEDESTAL FOUNDATION, 12' SIGNAL PEDESTAL AND BASE, SIGNAL AHEAD FLASHER 12" YELLOW FLASHING SIGNAL INDICATION (3" RSC STUBOUT)
(8)	PEDESTAL FOUNDATION, 12' SIGNAL PEDESTAL AND BASE, SIGNAL AHEAD FLASHER 12" YELLOW FLASHING SIGNAL INDICATION (3" RSC STUBOUT)

FOR INFORMATION ONLY

I.D. NO. 71030169*160390*

I HEREBY CERTIFY THAT THIS PLAN, SPECIFICATION, OR REPORT WAS PREPARED BY ME OR UNDER MY DIRECT SUPERVISION AND THAT I AM A DULY REGISTERED PROFESSIONAL ENGINEER UNDER THE LAWS OF THE STATE OF MINNESOTA.
George M. Strumpfle
DATE 5/12/97 REG.NO. 21849

MSA CONSULTING ENGINEERS
1326 ENERGY PARK DRIVE
ST. PAUL, MINNESOTA 55108
(612) 644–4389
9800 SHELARD PARKWAY
MINNEAPOLIS, MINNESOTA 55441
(612) 546–0432

REVISIONS	DATE	DESCRIPTION
	5/9/97	INSERTED PER MNDOT REQUEST

DESIGNED
CHECKED
DRAWN
GRAPHIC SCALE 0 HORIZ. 50; 0 VERT. 5

CITY OF ELK RIVER
INTERSECTION LAYOUT
SYSTEM "D"
T.H. 169 @ JACKSON AVE. / 193RD AVE.
S.A.P 204–104–04 M.T.B.

RECORD PLAN
DECEMBER 1998

DATE APRIL, 1994 | SHEET – OF – SHEETS | PROJECT NO. 230–216–20

1301

DRAWING NUMBER
197AV.97
10

DRAWING NUMBER

DRAWING NUMBER

DRAWING NUMBER

SAFCO PRODUCTS • NEW HOPE, MINNESOTA
REORDER BY PART NUMBER 62502
FOLDING EDGE OF PAPER ON THIS LINE

Fri May 9 11:40:05 1997